A 01

PIECES D'ORIGINE
ORIGINAL-TEILE
GENUINE PARTS
PIEZAS DE ORIGEM
RICAMBI ORIGINALI

MEHARI 4×2 09/68►07/87
4×4 10/79►07/83

MIC 00137
Edition 08/91

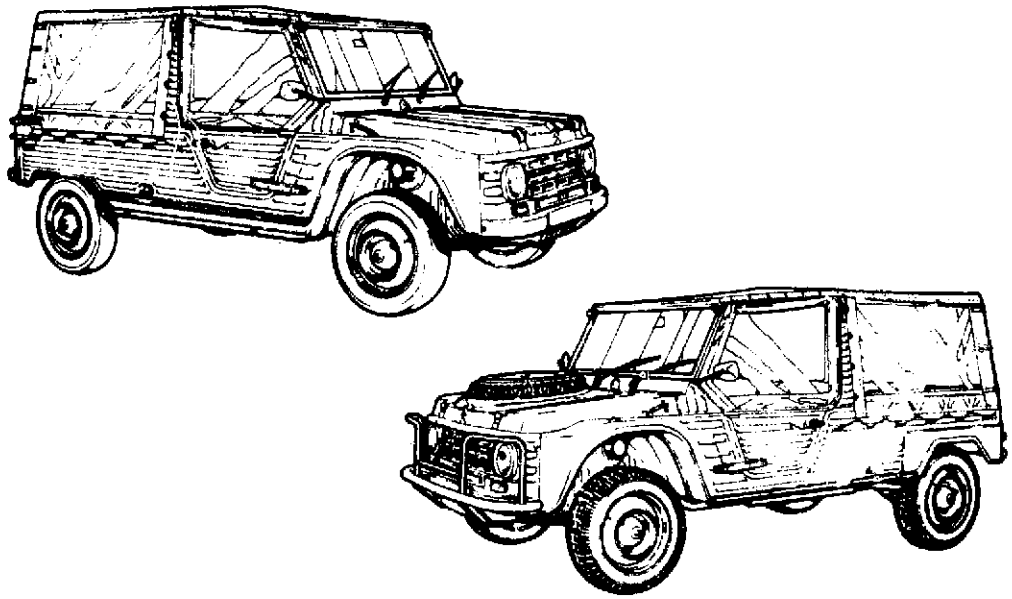

AUTOMOBILES CITROËN
SERVICE A LA CLIENTÈLE
DÉPARTEMENT PIÈCES DE RECHANGE
GESTION COMMERCIALE

141, Bd Mac-Donald
B.P. n° 8
75922 PARIS Cedex 19

DESIGNATION DES TYPES DE VÉHICULES
BEZEICHNUNG DER WAGENTYPEN
CAR TYPES DESCRIPTION
DESIGNACION DE LOS TIPOS DE VEHICULOS
DENOMINAZIONE DEI TIPI DI VETTURE

MEHARI 4 x 2 (3 CV) / MEHARI 4 x 4 (3 CV)
MOTEUR «602» : 2 CYL. 74 x 70 : RAPPORT VOLUMÉTRIQUE - 8,5/1
MOTOR «602» : 2 ZYL. 74 x 70 : VOLUMENVERHAELTNIS - 8,5/1
ENGINE «602» : 2 CYL. 74 x 70 : VOLUME RATIO - 8,5/1
MOTOR «602» : 2 CIL. 74 x 70 : RELACION VOLUMETRICA - 8,5/1
MOTORE «602» : 2 CIL. 74 x 70 : RAPPORTO VOLUMETRICO - 8,5/1

COUPLE CONIQUE : 8 x 31
KEGEL- UND TELLERRAD : 8 x 31
CROWN WHEEL AND PINION : 8 x 31
GRUPO CONICO : 8 x 31
COPPIA CONICA : 8 x 31

MEHARI 4 x 2
EMBRAYAGE : NORMAL OU CENTRIFUGE
NORMAL- ODER FLIEHKRAFTKUPPLUNG
CLUTCH : NORMAL OR CENTRIFUGAL
EMBRAGUE : NORMAL O CENTRIFUGO
FRIZIONE NORMALE O CENTRIFUGA

MEHARI 4 x 4
EMBRAYAGE NORMAL
NORMALKUPPLUNG
NORMAL CLUTCH
EMBRAGUE NORMAL
FRIZIONE NORMALE

MEHARI 4 x 4
DISPOSITIF DE BLOCAGE DU DIFFERENTIEL DU PONT ARRIERE
SPERRVORRICHTUNG F. HINTERES ACHSENDIFFERENTIAL
REAR AXLE DIFFERENTIAL BLOCKING DEVICE
DISPOSITIVO DE BLOQUEO DE DIFERENCIAL DE EJE TRASERO
DISPOSITIVO BLOCCAGGIO DIFFERENZIALE ASSALE POSTERIORE

DIRECTION A CREMAILLERE
ZAHNSTANGENLENKUNG
RACK STEERING
DIRECCION DE CREMALLERA
STERZO CREMAGLIERA

SUSPENSIONS AVANT ET ARRIERE
VORDERE UND HINTERE AUFHAENGUNG
FRONT AND REAR SUSPENSIONS
SUSPENSIONES DELANTERAS Y TRASERAS
SOSPENSIONI ANTERIORI E POSTERIORI

– A RESSORTS HELICOIDAUX HORIZONTAUX
– MIT WAGERECHTEN FEDERN, SCHRAUBENFOERMIG
– WITH HORIZONTAL HELICOIDAL SPRINGS
– CON MUELLES HELICOIDALES HORIZONTALES
– CON MOLLE ELICOIDALI ORIZZONTALI

MEHARI 4 x 2
FREINS AVANT EN SORTIE DE BOITE DE VITESSES
VORDERE BREMSEN AM GETRIEBEAUSTRITT
FRONT BRAKES ON GEARBOX DRIVING END
FRENOS DELANTEROS EN LA SALIDA DE CAJA VELOCIDADES
FRENI ANTERIORI NELLA USCITA SCATOLA CAMBIO

– A TAMBOURS ▶ 7/77 – A DISQUES 7/77 ▶
– TROMMELAUSFUEHRUNG ▶ 7/77 – SCHEIBENAUSFUEHRUNG 7/77 ▶
– DRUM MODEL ▶ 7/77 – DISC MODEL 7/77 ▶
– DE TAMBORES ▶ 7/77 – DE DISCOS 7/77 ▶
– A TAMBURI ▶ 7/77 – A DISCHI 7/77 ▶

FREINS A TAMBOURS SUR ROUES ARRIERE
TROMMELBREMSEN AN HINTERRAEDERN
DRUM BRAKES ON REAR WHEELS
FRENOS DE TAMBORES SOBRE RUEDAS TRAS.
FRENI A TAMBURI SULLE RUOTE POST.

MEHARI 4 x 4
FREINS A DISQUES
SCHEIBENBREMSEN
DISC TYPE BRAKE
FRENOS DE DISCOS
FRENI A DISCHI

– A L'AVANT : SORTIE BOITE DE VITESSES
– VORN : GETRIEBEAUSTRITT
– FRONT : GEARBOX DRIVING END
– DELANT. : SALIDA DE CAJA VELOCIDADES
– ANTERIORI : USCITA SCATOLA CAMBIO

– A L'ARRIERE : SORTIE DE PONT ARRIERE
– HINTEN : ACHSENAUSTRITT
– REAR : AXLE ENDS
– ATRAS : SALIDAS DE EJE
– POSTERIORI : USCITA DELL'ASSALE

CARROSSERIE EN «ABS» THERMOFORME TEINTÉE
KAROSSERIE AUS GEFORMTEM «ABS», GETOENT
BODY IN SHAPED TINTED «ABS»
CARROCERIA EN «AES» TERMOFORMADO COLORADO
CARROZZERIA IN «ABS» TERMOFORMATO COLORADO

– 2 PLACES OU 2 + 2 PLACES AVEC BANQUETTE
– 2 SITZPLAETZE ODER 2 + 2 SITZPLAETZE AUF SITZBANK
– 2 SEATS OR 2 + 2 SEATS ON BENCH
– 2 SITIOS O 2 + 2 SITIOS CON BANQUETA
– 2 POSTI O 2 + 2 POSTI CON BANQUETA

VERSIONS — **«MEHARI» - 4 x 2 - 9/68 ▶07/87**
MODELLE — **«MEHARI» - 4 x 4 - 10/79 ▶7/83**
VERSIONS
VERSIONES
VERSIONI

VERSIONS SPÉCIALES — **«MEHARI AZUR» - 4/83 ▶**
SPEZIALMODELLE
SPECIAL VERSIONS
VERSIONES ESPECIALES
VERSIONI SPECIALI

137

SYMBOLES UTILISÉS DANS LE TEXTE
ZEICHENERKLAERUNG
SYMBOLS USED IN THE TEXT
LEYENDA DE LOS SIMBOLOS
PROSPETTO DEI SIMBOLI

A-03

( )	**MONTAGE XT : (CH) : SUISSE** MONTAGE FUER XT : (CH) : SCHWEIZ FITTING XT : (CH) : SWITZERLAND MONTAJE XT : (CH) : SUIZA MONTAGGIO XT : (CH) : SVIZERRA
A	**AMPERE** AMPERE AMPERE AMPERIO AMPERE
ADM	**ADMISSION** EINLASS INLET ADMISION ASPIRAZIONE
AEI	**ALLUMAGE ÉLECTRONIQUE INCORPORÉ** EINGEBAUTE ELEKTRONISCHE ZUENDUNG INCORPORATED ELECTRONIC IGNITION ENCENDIDO ELECTRONICO INCORPORADO ACCENSIONE ELETTRONICA INCORPORATA
AH	**AMPERE HEURES** AMPERE-STUNDE AMPERE HOUR AMPERIO HORA AMPERE ORA
AMBU	**VERSION AMBULANCE** MODEL AMBULANCE AMBULANCE MODEL VERSION AMBULANCIA VERSIONE AMBULANCE
AR	**ARRIERE** HINTEN REAR ATRAS POSTERIORE
ATTREM	**MONTAGE POUR ATTELAGE REMORQUE** MONTAGE ANHAENGERZUGVORRICHTUNG FITTING FOR TRAILER TOWING MONTAJE DE REMOLQUE MONTAGGIO PER TRAINO
AUTO-ÉCOLE	**AUTO-ÉCOLE** FAHRSCHULE DRIVING SCHOOL AUTO-ESCUELA AUTO-SCUOLA
AV	**AVANT** VORN FRONT DELANTE ANTERIORE
BK	**CARROSSERIE BREAK, TOUTES VERSIONS** BREAK-KAROSSERIEN, ALLE MODELLE ESTATE CAR BODY, ALL MODELS CARROCERIA BREAK, TODAS VERSIONES CARROZZERIA BREAK, TUTTE VERSIONI
BL	**CARROSSERIE BERLINE, TOUTES VERSIONS** BERLINENKAROSSERIEN, ALLE MODELLE SALOON BODY, ALL MODELS CARROCERIA BERLINA, TODAS VERSIONES CARROZZERIA BERLINA, TUTTE VERSIONI
BLD	**BERLINE BLINDÉE** GEPANZERTE BERLINE ARMOURED SALOON BERLINA BLINDADA BERLINA BLINDATA
BREAK	**VERSION BREAK** MODELL BREAK BREAK MODEL VERSION BREAK VERSIONE BREAK
BV	**BOITE DE VITESSES** GETRIEBE GEARBOX CAJA DE VELOCIDADES SCATOLA CAMBIO
BV AUTO	**BOITE DE VITESSES AUTOMATIQUE** AUTOMATISCHES GETRIEBE AUTOMATIC GEARBOX CAJA DE VELOCIDADES AUTOMATICA SCATOLA CAMBIO AUTOMATICA
BV 5	**BOITE 5 VITESSES** 5-GANGGETRIEBE 5-SPEEDS GEARBOX CAJA DE 5 VELOCIDADES SCATOLA CAMBIO A 5 MARCE
BVH	**BOITE DE VITESSES HYDRAULIQUE** GETRIEBE (HYDRAULISCHE SCHALTUNG) GEARBOX (HYDRAULIC CONTROL) CAJA DE VELOCIDADES (HIDRAULICA) SCATOLA CAMBIO (IDRAULICA)
BVM	**BOITE DE VITESSES MÉCANIQUE** GETRIEBE (MECHANISCHE SCHALTUNG) GEARBOX (MANUAL CONTROL) CAJA DE VELOCIDADES (MECANICA) SCATOLA CAMBIO (MECCANICA)
C	**COUPLE** SATZ VON 2 ZAHNRAEDERN TWO-GEAR SET GRUPO COPPIA
CAGE	**ÉCROU EN CAGE** KAEFIGMUTTER CAGE NUT TUERCA EN CAJILLA DADO IN GABBIA
CAN	**CANNELURES** NUTEN SPLINES RANURAS SCANALATURE
CARBU	**MONTAGE CARBURATEUR** VERGASEREINBAU CARBURETTOR EQUIPMENT MONTAJE CARBURADOR MONTAGGIO CARBURATORE
CC	**CAOUTCHOUC** GUMMI RUBBER CAUCHO GOMMA
CDE	**COMMANDE** BETAETIGUNG CONTROL MANDO COMANDO
CENT	**CENTRAL** MITTLER CENTRAL CENTRAL CENTRALE
CH	**CHAUFFAGE** HEIZUNG HEATING CALEFACCION RISCALDAMENTO
CHC	**VIS TÊTE 6 PANS CREUX** INBUSSCHRAUBE SCREW WITH HEXAGON GROOVE TORNILLO CABEZA HUECA HEXAGONAL VITE A TESTA A INCAVO ESAGONALE

SYMBOLES UTILISÉS DANS LE TEXTE (Suite)
ZEICHENERKLAERUNG (Forts.)
SYMBOLS USED IN THE TEXT (Cont.)
LEYENDA DE LOS SIMBOLOS (Cont.)
PROSPETTO DEI SIMBOLI (Cont.)

CLIMAT	**CLIMATISEUR** KLIMAANLAGE AIR CONDITIONER CLIMATIZADOR CLIMATIZZATORE
CLIN	**VERSION CLINIQUE** KLINIK-KRANKENWAGEN HOSPITAL MODEL VERSION CLINICA VERSIONE CLINICA
CLIP	**ÉCROU A CLIPPER** MUTTER ZUM EINFASSEN CLIPPING NUT TUERCA DE ABROCHAR DADO DA INCASTONARE
CLUB	**HABILLAGE «CLUB»** AUSRUESTUNG «CLUB» FITTING «CLUB» EQUIPO «CLUB» EQUIPAGGIAMENTO «CLUB»
CO	**RONDELLE «CONTACT»** GERIFFELTE SCHEIBE SHAKE-PROOF WASHER ARANDELA ESTRELLADA RONDELLA STRIATA
COL	**VIS COLONNETTE** STUTZSCHRAUBE SHOULDERED SCREW TORNILLO COLUMNILLA VITE COLONNETTA
COMM	**VERSION COMMERCIALE** MODELL COMMERCIALE COMMERCIAL MODEL VERSION COMERCIAL VERSIONE COMMERCIALE
CR	**RONDELLE CRANTÉE** VERZAHNTE SCHEIBE TOOTHED WASHER ARANDELA DENTADA RONDELLA DENTATA
CU	**CUIVRE** KUPFER COPPER COBRE RAME
D	**CÔTÉ DROIT** RECHTE SEITE RIGHT HAND SIDE LADO DERECHO LATO DESTRO
DA	**DIRECTION ASSISTÉE** HYDRAULISCHE LENKUNG POWER STEERING DIRECCION ASISTIDA STERZO ASSISTITO
DAD	**DIRECTION A DROITE** RECHTSLENKUNG RIGHT HAND STEERING DIRECCION A DERECHA GUIDA A DESTRA
DAG	**DIRECTION A GAUCHE** LINKSLENKUNG LEFT HAND STEERING DIRECCION A IZQUIERDA GUIDA A SINISTRA
DECAP	**BERLINE DÉCAPOTABLE** BERLINE MIT AUFKLAPPBAREM VERDECK CONVERTIBLE SALOON BERLINA DECAPOTABLE BERLINA APRIBILE
DENT	**DENTS OU DENTELURES** ZAEHNE ODER ZACKEN TEETH OR NOTCHES DIENTES O ESTRIAS DENTI O STRIE
DEO	**DEMANDER EN OUTRE** DAZU ORDER IN ADDITION PEDIR ADEMAS RICHIEDERE INOLTRE
DI	**DIESEL** DIESEL DIESEL DIESEL DIESEL
DNA	**DIRECTION NON ASSISTÉE** MECHANISCHE LENKUNG MANUAL STEERING DIRECCION NON ASISTIDA STERZO NON ASSISTITO
É	**ÉPAISSEUR** STAERKE THICKNESS ESPESOR SPESSORE
ÉCH	**ÉCHAPPEMENT** AUSLASS EXHAUST ESCAPE SCARICO
ÉCO	**VERSION ÉCONOMIQUE** SPARMODELL ECONOMIC VERSION VERSION ECONOMICA VERSIONE ECONOMICA
EGTEMP	**ESSUIE-GLACE TEMPORISÉ** SCHEIBENWISCHER M. VERZOEG. BETAET. WINDOW WIPER WITH DELAYED ACTION LIMPIA CRISTAL TEMPORIZADO TERGICRISTALLO TEMPORIZZATO
ÉLAS	**RONDELLE ÉLASTIQUE** FEDERSCHEIBE FLEXIBLE WASHER ARANDELA ELASTICA RONDELLA ELASTICA
EMBASS	**EMBRAYAGE ASSISTÉ** GEHOLFENE KUPPLUNG BOOSTER CLUTCH EMBRAGUE ASISTIDO FRIZIONE ASSISTITA
EMBAUT	**EMBRAYAGE AUTOMATIQUE** AUTOMATISCHE KUPPLUNG AUTOMATIC CLUTCH EMBRAGUE AUTOMATICO FRIZIONE AUTOMATICA
EMBCEN	**EMBRAYAGE CENTRIFUGE** FLIEHKRAFKUPPLUNG CENTRIFUGAL CLUTCH EMBRAGUE CENTRIFUGO FRIZIONE CENTRIFUGA
EMBNOR	**EMBRAYAGE NORMAL** NORMALKUPPLUNG NORMAL CLUTCH EMBRAGUE NORMAL FRIZIONE NORMALE

137 **SYMBOLES UTILISÉS DANS LE TEXTE (Suite)**
ZEICHENERKLAERUNG (Forts.)
SYMBOLS USED IN THE TEXT (Cont.)
A-05 ↑ LEYENDA DE LOS SIMBOLOS (Cont.)
PROSPETTO DEI SIMBOLI (Cont.)

ENS	**ENSEMBLE** SATZ TEILE PARTS SET CONJUNTO INSIEME
ENT	**ENTRAXE** ACHSABSTAND DISTANCE BETWEEN CENTRES ENTRE EJES INTERASSE
ESGLAR	**ESSUIE-GLACE ARRIERE** HINT. SCHEIBENWISCHER REAR WINDOW WIPER LIMPIA CRISTAL TRASERO TERGICRISTALLO POSTERIORE
ESGLAV	**ESSUIE-GLACE AVANT** VORDERE SCHEIBENWISCHER FRONT WINDOW WIPER LIMPIA CRISTAL DELANTERO TERGICRISTALLO ANTERIORE
ESS	**ESSENCE** BENZIN PETROL GASOLINA BENZINA
EXT	**EXTÉRIEUR** AUSSENSEITE EXTERNAL EXTERIOR ESTERNO
F	**LONGUEUR DE FILETAGE** GEWINDELAENGE THREADING LENGHT LONGITUD DEL ENROSCAMIENTO LUNGHEZZA FILLETTATURA
FAMI	**VERSION FAMILIALE** MODELL FAMILIALE FAMILIAL MODEL VERSION FAMILIAL VERSIONE FAMILIALE
FHC	**TETE FRAISÉE A 6 PANS CREUX** INBUSSCHRAUBE MIT FRAESKOPF COUNTERSUNK HEAD WITH HEX. GROOVE CABEZA AVELLANADA HUECO HEXAGONAL TESTATA SVASATA A INCAVO ESAGONALE
G	**COTÉ GAUCHE** LINKE SEITE LEFT HAND SIDE LADO IZQUIERDO LATO SINISTRO
GA	**GRANDES ADMINISTRATIONS** GROSSE BEHOERDEN GOVERNMENT SERVICES GRANDES ADMINISTRACIONES GRANDI AMMINISTRAZIONI
GE	**VERSION : GRANDE EXPORTATION – PO** AUSFUEHR. GRANDE EXPORTACION – PO MODEL : GRANDE EXPORTATION – PO VERSION : GRAN EXPORTACION – PO VERSIONE : GRAND'ESPORTAZIONE – PO
GLACE	**VERSION AVEC GLACE** AUSFUEHRUNG MIT SEITLICHEN FENSTERN EQUIPMENT WITH GLAZED SIDE PANELS VERSION CON CRISTALES LATERALES VERSIONE A CRISTALLI LATERALI
GW	**RONDELLE GROWER** FEDERRING GROWER RING ARANDELA GROWER RONDELLA GROWER
H	**HAUTEUR** HOEHE HEIGHT ALTURA ALTEZZA
HC	**VIS SANS TETE A 6 PANS CREUX** INBUSSCHRAUBE OHNE KOPF HEX. GROOVE SCREW W/O HEAD TORNILLO DE HUECO HEX. SIN CABEZA VITE A INCAVO ESAG. SENZA TESTA
HE	**HEXAGONAL** SECHSKANT HEXAGONAL EXAGONAL ESAGONALE
HEF	**ÉCROU AUTO-FREINE** SELBSTSICHERNDE MUTTER SELF LOCKING NUT TUERCA AUTOFRENADA DADO AUTOFRENATO
HEK	**ÉCROU CRÉNELÉ** KRONENMUTTER CASTELLATED NUT TUERCA ALMENADA DADO A CORONA
HEMB	**ÉCROU A EMBASE** MUTTER M. BREITER ANLAUFFLAECHE NUT WITH LARGE BASE TUERCA CON BASILLA DADO A BASETTA
HERI	**ÉCROU HE AVEC RONDELLE IMPERDABLE** MUTTER MIT SCHEIBE NUT WITH WASHER TUERCA CON ARANDELA IMPERDIB. DADO CON RONDELLA IMPERDIBILE
IE	**INJECTION ÉLECTRONIQUE** ELEKTRONISCHE EINSPRITZUNG ELECTRONIC INJECTION INYECCION ELECTRONICA INIEZIONE ELETTRONICA
INF	**INFÉRIEUR** UNTERN LOWER INFERIOR INFERIORE
IN.ME.CO	**INTERROGATION - MESURE - CONTROLE** FRAGE - MESSEN - KONTROLLE INTERROGATION - MESURING - CHECK INTERROGACION - MEDIDA - COMPROBACION INTERROGAZIONE - MISURA - CONTROLLO
INT	**INTÉRIEUR** INNEN INTERNAL INTERIOR INTERNO
INTM	**INTERMÉDIAIRE** ZWISCHENGELEGEN INTERMEDIATE INTERMEDIO INTERMEDIO
ISOTER	**POUR MONTAGE ISOTHERMIQUE** FUER ISOTHERMISCHE MONTAGE FOR ISOTHERMIC EQUIPMENT PARA MONTAJE ISOTERMICO PER MONTAGGIO ISOTERMICO
LAR	**LARGEUR** BREITE WIDTH ANCHURA LARGHEZZA

137 **SYMBOLES UTILISÉS DANS LE TEXTE (Suite)**
ZEICHENERKLAERUNG (Forts.)
SYMBOLS USED IN THE TEXT (Cont.)
A-06 LEYENDA DE LOS SIMBOLOS (Cont.)
PROSPETTO DEI SIMBOLI (Cont.)

LAT	**LATÉRAL** SEITLICH LATERAL LATERAL LATERALE
LEVGLAV	**LEVE-GLACE AVANT (ÉLECTRIQUE)** SCHEIBENHEBER, VORN (ELEKTRISCH) WINDOW WINDER, FRONT (ELECTRIC) LEVACRISTAL DELANTERO (ELECTRICO) ALZACRISTALLO ANTERIORE (ELETTRICO)
LEVGLAR	**LEVE-GLACE ARRIERE (ELECTRIQUE)** SCHEIBENHEBER, HINTEN (ELEKTRISCH) WINDOW WINDER, REAR (ELECTRIC) ELEVACRISTAL TRASERO (ELECTRICO) ALZACRISTALLO POSTERIORE (ELETTRICO)
LEVMAL	**OUVERTURE DE MALLE ARRIÈRE AGRANDIE** BEI VERGROESS. HECKTUEROEFFNUNG ENLARGED BOOT DOOR OPENING ABERTURA DE MALETA AGRANDADA APERTURA COF. BAULE INGRANDITA
LIMOU	**BERLINE LONGUE** LANGE LIMOUSINE LONG SALOON BERLINA LARGA BERLINA LUNGA
LON	**LONGUEUR** LAENGE LENGHT LONGITUD LUNGHEZZA
LUNCHA	**LUNETTE AR CHAUFFANTE** HEIZBARE RUECKFENSTER REAR HEATED WINDOW LUNETA TRAS. TERMICA LUNOTTO POST. TERMICO
LUXE	**HABILLAGE INTÉRIEUR ORDINAIRE** EINFACHE INNENAUSRUESTUNG INSIDE PLAIN FITTING EQUIPO INTERIOR ORDINARIO EQUIPAGGIAMENTO INTERNO ORDINARIO
M.AR	**MARCHE ARRIERE** RUECKWAERTSGANG REVERSE MARCHA ATRAS RETROMARCIA
MEP	**RONDELLE A MÉPLAT** SCHEIBE MIT ABFASUNG WASHER WITH FLAT PART ARANDELA DE CORTE RONDELLA A TAGLIO
(NC)	**NOUVELLE-CALÉDONIE** NEUKALEDONIEN NEW CALEDONIA NUEVA CALEDONIA NUOVA CALEDONIA
NFP	**NE FOURNISSONS PLUS** NICHT MEHR LIEFERBAR NO LONGER SUPPLIED NO FABRICAMOS MAS NON PIU FORNITO
OPTION	**OPTION** WAHLWEISE OPTIONAL OPCION OPZIONE
PA	**PALLAS (PRÉSENTATION AMÉLIORÉE)** PALLAS (VERBESSERTES AUSSEHEN) PALLAS (IMPROVED APPEARANCE) PALLAS (PRESENTACION MEJORADA) PALLAS (PRESENTAZIONE MIGLIORATA)
PHABAR	**FEU DE BROUILLARD AR.** HINTERE NEBELLEUCHTE REAR FOG LIGHT LUZ DE NIEBLA TRAS. FANALINO NEBBIA POST.
PHAREC	**PHARE DE RECUL** RUECKFAHRLEUCHTE BACKING LIGHT FARO DE RETROCESO FARO RETROMARCIA
PO	**ÉQUIPEMENT ANTI-POUSSIÈRE** AUSRUESTUNG MIT STAUBSCHUTZ DUST PROOF EQUIPMENT EQUIPO CONTRO EL POLVO EQUIPAGGIAMENTO CONTRO LA POLVERE
PORCOU	**MONTAGE PORTE COULISSANTE** EINBAU SCHEIBETUER SLIDING DOOR EQUIPMENT MONTAJE PUERTA DESLIZANTE MONTAGGIO PORTIERA SLITTANTE
PREAME	**PRÉSENTATION AMÉLIORÉE** VERBESSERTES AUSSEHEN IMPROVED APPEARANCE PRESENTACION MEJORADA PRESENTAZIONE MIGLIORATA
PRECLI	**POUR MONTAGE CLIMATISEUR** FUER EINBAU EINER KLIMAANLAGE FOR FITTING A AIR CONDITIONER PARA MONTAJE UN CLIMATIZADOR PER MONTARE UN CLIMATIZZATORE
PT	**PRESTIGE (BL LONGUE - PREAME)** PRESTIGE (LANGE LIMOUSINE PREAM) PRESTIGE (LONG SALOON PREAM) PRESTIGE (LARGA BERLINA PREAM) PRESTIGE (LUNGA BERLINA PREAM)
Q	**ÉCROU CARRÉ** VIERKANTMUTTER SQUARE NUT TUERCA CUADRADA DADO QUADRATO
RAPVOL	**RAPPORT VOLUMÉTRIQUE** VOLUMENVERHAELTNIS VOLUME RATIO RELACION VOLUMETRICA RAPPORTO VOLUMETRICO
REGVIT	**RÉGULATION DE VITESSES** GESCHWINDLIGKEITSREGULIERUNG SPEED REGULATION REGULACION DE VELOCIDAD REGOLAZIONE DELLA VELOCITA
REP	**REPERE** MARKIERUNG MARKING MARCO SEGNO
RM	**REMPLACE MODÈLE** ERSETZT DIE AUSFUEHRUNGEN REPLACES MODELS REEMPLAZA MODELOS SOSTITUISCE MODELLI
RMP	**REMPLACE MODELE PRÉCÉDENT** ERSETZT DIE FRUEHEREN AUSFUEHRUNGEN REPLACES PREVIOUS MODELS REEMPLAZA LOS MODELOS PRECEDENTES SOSTITUISCE I MODELLI PRECEDENTI

ROUALL — **ROUE EN ALLIAGE LÉGER**
RAD AUS LEICHTER LEGIERUNG
LIGHT-ALLOY WHEEL
RUEDA EN ALEACION LIGERA
RUOTA IN LEGA LEGGERA

RP — **REMPLACÉ PAR**
ERSETZ DURCH
SUPERSEDED BY
REEMPLAZADO POR
SOSTITUITO DA

RTABOR — **RHÉOSTAT DE TABLEAU DE BORD**
RHEOSTAT AM ARMATURENBRETT
INSTRUMENT PANEL RHEOSTAT
REOSTATO DE TABLERO ABORDO
REOSTATO QUADRO STRUMENTAZIONE

SAUF — **EXCEPTÉ**
MIT AUSNAHME
EXCEPT
EXCEPTO
SALVO

SAVESC — **SIEGES AV. ESCAMOTABLE**
AUFKLAPPBARER SITZ, VORN
FRONT FOLDING SEAT
ASIENTO DELANT. PLEGABLE
SEDILE ANT. PLEGABILE

SERT — **ÉCROU A SERTIR**
MUTTER ZUM EINFASSEN
NUT TO BE INSERTED
TUERCA PARA ENCAJAR
DADO DA INCASTONARE

SIECHAU — **MONTAGE SIEGE CHAUFFANT**
ANBAU HEIZBARER SITZ
EQUIPMENT WITH HEATING SEAT
MONTAJE ASIENTO TERMICO
MONTAGGIO SEDILE TERMICO

SOUD — **ÉCROU SOUDABLE**
SCHWEISSBARER MUTTER
NUT TO BE WELDED
TUERCA SOLDABLE
DADO SALDABILE

SPIR — **SPIRES (RESSORT)**
WINDUNGEN (FEDER)
TURNS (SPRING)
ESPIRAS (MUELLE)
SPIRE (MOLLA)

SUP — **SUPÉRIEUR**
OBEN
UPPER
SUPERIOR
SUPERIORE

TA — **TARAUDEUSE**
BLECHSCHRAUBE
THREADCUTTER SCREW
TERRAJANTE
FILETTANTE

TCA — **VIS A TETE CARRÉE**
VIERKANTKOPFSCHRAUBE
SQUARE HEAD SCREW
TORNILLO DE CABEZA CUADRADA
VITE A TESTA QUADRATA

TCB — **TETE CYLINDRIQUE BOMBÉE**
GEWOELBTER ZYLINDERKOPF
ROUNDED CYLINDRICAL HEAD
CABEZA CILINDRICA COMBADA
TESTATA CILINDRICA TONDA

TCF — **TETE CYLINDRIQUE FENDUE**
SPALTZYLINDERKOPF
SLOTTED CYLINDRICAL HEAD
CABEZA CILINDRICA HENDIDA
TESTA CILINDRICA TAGLIATA

TF — **TETE FRAISÉE**
FRAESKOPF
COUNTERSUNK HEAD
CABEZA AVELLANADA
TESTATA SVASATA

TFB — **TETE FRAISÉE BOMBÉE**
GEWOELBTER FRAESKOPF
ROUNDED COUNTERSUNK HEAD
CABEZA AVELLANADA COMBADA
TESTATA SVASATA TONDA

TH — **TETE HEXAGONALE**
SECHSKANTKOPF
HEXAGONAL HEAD
CABEZA EXAGONAL
TESTATA ESAGONALE

THEMB — **VIS A EMBASE**
SCHRAUBE MIT BREITEM KOPF
SCREW WITH LARGE HEAD
TORNILLO DE BASILLA
VITE A BASETTA

THRI — **VIS TH AVEC RONDELLE IMPERDABLE**
SCHRAUBE MIT SCHEIBE
SCREW WITH WASHER
TORNILLO CON ARANDELA IMPERDIBLE
VITE CON RONDELLA IMPERDIBILE

TO — **JOINT TORIQUE**
RING DICHTUNG
RING SEAL
JUNTA TORICA
GOMMINO

TOIOUV — **TOIT OUVRANT**
SCHIEBEDACH
OPENING ROOF
TECHO ABRIDERO
TETTO APRIBILE

TOLE — **VERSION SANS GLACE**
AUSFUEHRUNG OHNE SEITLICHE FENSTER
EQUIPMENT WITH UNGLAZED SIDE PANELS
VERSION SIN CRISTALES LATERALES
VERSIONE SENZA CRISTALLI LATERALI

TPB — **VIS BOMBÉE (POÊLIER)**
SCHRAUBE M. GEWOELBTEM KOPF
SCREW WITH ROUNDED HEAD
TORNILLO CABEZA COMBADA
VITE A TESTA TONDA

TR — **TETE RONDE**
RUNDKOPF
ROUND HEAD
CABEZA REDONDA
TESTA TONDA

TRANS — **TRANSFORMABLE**
WAGEN OHNE AUFBAU
TRANSFORMABLE
TRANSFORMABLE
TRASFORMABILE

TT — **TOUS TYPES**
ALLE TYPEN
ALLE TYPES
TODOS TIPOS
TUTTI TIPI

V — **VOLT**
VOLT
VOLT
VOLTIO
VOLT

VERAUT — **VERROUILLAGE AUTOMATIQUE DES PORTES**
VERRIEGELUNG DER TUEREN (AUTOMATISCH)
AUTOMATIC DOOR LOCKING
BLOQUE AUTOMATIC PUERTAS
BLOCCAGGIO AUTOM. PORTIERE

VOILARG	**VOIE ÉLARGIE** ERWEITERTE SPURWEITE WINDENED TREAD VIA EXTENDIDA CARREGGIATA ALLARGATA	
W	**WATT** WATT WATT VATIO WATT	
XT	**MONTAGE EXPORT** EXPORT AUSFUEHRUNG EXPORT FITTING MONTAJE EXPORT MONTAGGIO ESPORT	
⌀	**DIAMETRE** DURCHMESSER DIAMETER DIAMETRO DIAMETRO	
?	**NOMBRE D'EXEMPLAIRES VARIABLE** STUECKZAHL NACH BEDARF AS NECESSARY SEGUN NECESIDADES SECONDA RICHIESTA	
1e - 2e	**PREMIERE - DEUXIEME POSSIBILITÉ** ERSTE - ZWEITE AUSFUEHRUNG FIRST - SECOND POSSIBILITY PRIMERA - SEGUNDA POSIBILIDAD PRIMA - SECONDA POSSIBILITA	
1e - 2e	**PREMIERE - DEUXIEME VITESSE** ERSTER - ZWEITER GANG FIRST - SECOND GEAR PRIMERA - SEGUNDA MARCHA PRIMA - SECONDA MARCIA	
► 2/74	**JUSQUE (VOIR NOTA)** BIS (SIEHE ANMERKUNG) UNTIL (SEE NOTE) HASTA (VER NOTA) FINO A (VERDERE NOTA)	
2/74 ►	**DEPUIS (VOIR NOTA)** AB (SIEHE ANMERKUNG) SINCE (SEE NOTE) DESDE (VER NOTA) DA (VEDERE NOTA)	
8	**REPERE SOULIGNÉ DANS COLONNE «I» : PIECE EXISTANT EN «PIECE SPÉCIALE» EN FIN DE CHAPITRE** UNTERSTRIECHENE ZENNZIFFER IN DER «I» SPALTE : SIEHE AUCH «SPEZIALTEIL» AM ENDE DES KAPITELS UNDERLINED MARK NUMBER IN «I» COLUMN: SEE «SPECIAL PAR » AT THE CAPTER END CIFRA DE SENAL SUBRAYADA EN COLUMNA «I» VER TAMBIEN «PIEZA ESPECIAL» EN FIN DEL CAPITULO NUMERO DI RIFERIMENTO SOTTOLINEATO NELLA COLONNA «I» : VEDERE «PEZZO SPECIALE» FINI CAPITOLO	

NOTA : LA VALIDITÉ D'UN MONTAGE PEUT-ÊTRE INDIQUÉE POUR :
ANM. : DIE GULTIGKEIT EINES EINBAUES KANN ANGES EIGT SEIN FUER :
NOTE : THE VALIDITY OF A FITTING CAN BE INDICATED FOR :
NOTA : LA VALIDEZ DE UN MONTAJE PUEDE SER INDICADA PARA :
NOTA : LA VALIDITA MONTAGGIO PODE ESSERE INDICATA PER :

– TT. PAR,	**1o DATE**	– EX. :	
MIT,	1o DATUM	– B.W.	
WITH,	1o DATE	– E.G. :	**7/84 ► 7/85**
CON,	1o FECHA	– EX. :	
CON	1o DATA	– ES. :	
	2o No D'ORGANISATION	– EX. :	
	2o ORGANISATIONSNUMMER	– B.W. :	
	2o ORGAZATION NUMBER	– E.G. :	**2793 ► 3157 (SAUF «C 25» - «C 35»)**
	2o No DE ORGANIZACION	– EX. :	
	2o No ORGANIZZAZIONE	– ES. :	
– «C 25». PAR,	**No DE CHASSIS**	– EX. :	
MIT,	FAHRGESTELLNUMBER	– B.W. :	
WITH,	CHASSIS NUMBER	– EG.	**0111000 ►**
CON,	No DE CHASIS	– EX. :	
CON,	No DI TELAIO	– ES. :	
– «C 35». PAR,	**No D'ORGANISATION PR**	– EX. :	
MIT,	ERSETZTEILORGANISATIONSNR	– B.W. :	
WITH,	SPARE PART ORGANIZATION No	– E.G. :	**21500 ► 32809**
CON,	No DE ORGANIZACION P.R.	– EX. :	
CON,	No ORGANIZZAZIONE P.R.	– ES. :	

CODE COULEUR
FARBENVERMERKUNG
COLOUR CODIFYING
CODIGO DE COLORES
CODICE DEI COLORI

A-09

CODE VERMERK. CODE CODIGO CODICE	DESIGNATION COULEUR BEZEICHNUNG DER FARBE DESCRIPTION OF COLOUR DESIGNACION DE COLOR DENOMINAZIONE COLORE
152	**MARRON** KASTANIENBRAUN CHESTNUT-COLOURED CASTAÑO MARRONE
201	**ROUGE «HOPI»** ▶7/75 ROT «HOPI» RED «HOPI» ROJO «HOPI» ROSSO «HOPI»
356	**BLEU FONCÉ** DUNKELBLAU DARK BLUE AZUL OBSCURO BLU SCURO
400	**VERT «TIBESTI» 7/75** ▶7/78 GRUEN «TIBESTI» GREEN «TIBESTI» VERDE «TIBESTI» VERDE «TIBEST.»
405	**VERT «MONTANA»** GRUEN «MONTANA» GREEN «MONTANA» VERDE «MONTANA» VERDE «MONTANA»
508	**ORANGE «KIRGHISE»** ORANGE «KIRGHISE» ORANGE «KIRGHISE» ANARANJADO «KIRGHISE» ARANCIONE «KIRGHISE»
524	**JAUNE «ATACAMA»** GELB «ATACAMA» YELLOW «ATACAMA» AMARILLO «ATACAMA» GIALLO «ATACAMA»
526	**OCRE** OKERGELB OCHRE OCRE OCRA
602	**GRIS A 129** GRAU GREY GRIS GRIGIO
700	**NOIR** SCHWARZ BLACK NEGRO NERO
808	**OCRE (BEIGE «KALAHARI»** ▶ 7/77) OCKERGELB (BEIGE «KALAHARI») OCHRE (BEIGE «KALAHARI») OCRE (BEIGE «KALAHARI») OCRA (BEIGE «KALAHARI»)
811	**BLANC MEIJE** MEIJE-WEISS MEIJE WHITE BLANCO MEIJE BIANCO MEIJE
824	**BEIGE «HOGGAR»** BEIGE «HOGGAR» BEIGE «HOGGAR» BEIGE «HOGGAR» BEIGE «HOGGAR»
AC	**BEIGE «HOGGAR»** BEIGE «HOGGAR» BEIGE «HOGGAR» BEIGE «HOGGAR» BEIGE «HOGGAR»
AD	**JAUNE «ATACAMA»** GELB «ATACAMA» YELLOW «ATACAMA» AMARILLO «ATACAMA» GIALLO «ATACAMA»
CK	**BEIGE CÉRAMIQUE** KERAMIK - BEIGE CERAMIC BEIGE BEIGE CERAMICA BEIGE CERAMICA
EG	**ORANGE «KIRGHISE»** ORANGE «KIRGHISE» ORANGE «KIRGHISE» ANARANJADO «KIRGHISE» ARANCIONE «KIRGHISE»
LT	**BLEU FONCÉ** DUNKELBLAU DARK BLUE AZUL OBSCURO BLU SCURO
PD	**VERT «MONTANA»** GRUEN «MONTANA» GREEN «MONTANA» VERDE «MONTANA» VERDE «MONTANA»
WB	**BLANC MEIJE** MEIJE-WEISS MEIJE WHITE BLANCO MEIJE BIANCO MEIJE
WY	**BLANC A RAYURES BLEUES** WEISS MIT BLAUEN STREIFEN WHITE WITH BLUE STREAKS BLANCO CON RAYADOS AZULES BIANCO CON RIGHE BLU

TABLEAU DES VUES 09/91
AUFSTELLUNG DER BILDER
TABLE OF PICTURE
TABLA DE VISTAS
TABELLA DELLE VEDUTE

GROUPE
GROUP
GROUP 4
GRUPO
GRUPPO

SOUS-GROUPE UNTERGRUPPE SUBGROUP SUBGRUPO SOTTOGRUPPO	NUMÉRO NUMMER NUMBER NUMERO NUMERO	VUE BILD PICTURE VISTA VEDUTA
PEDALIER PEDALWERK PEDAL GEAR PEDALIER Y SOPORTE PEDALIERA		
▶ 7/77	4-314-10	B03 B04
7/77 ▶	4-314-10A	B05 B06
CRABOT DIFFERENTIEL DIFFERENTIALGETRIEBE REAR DIFFERENTIAL ENGRANAJE DIFERENTIAL TRAS. INGRANAGGI DIFFERENZIALE POST.		
– 4 × 4	4-341-10	B07 B08
CRABOT DIFFERENTIEL - CARTER GEHAEUSE DES HINTEREN DIFFERENTIALS REAR DIFFERENTIAL CASING CARTER DEL DIFERENCIAL TRAS. SCATOLA DIFFERENZIALE POST.		
– 4 × 4	4-341-11	B09
COMMANDE DE CRABOT DIFFERENTIALSCHALTUNG DIFFERENTIAL CONTROL MANDO ENGRANE DIFER COMANDO INNESTO DIFFER.		
– 4 × 4 ▶ 6/81	4-341-20	B10
– 4 × 4 6/81 ▶	4-341-20A	B11
CRABOT - AXES ET FOURCHETTE SCHALTGABEL F. DIFFERENTIAL DIFFERENTIAL FORK EJES Y HORQUILLA DIFERENCIAL PERNI E FORCELLA DIFFERENZIALE		
– 4 × 4	4-341-21	B12 B13
TRANSMISSIONS GELENKWELLEN DRIVE SHAFTS TRANSMISIONES TRASMISSIONI		
– 4 × 2 – 4 × 4	4-373-10	B14 B15

TRANSMISSIONS ARRIERE HINTERE GELENKWELLEN REAR DRIVESHAFTS TRANSMISIONES TRAS. TRASMISSIONI POST.			
– 4 × 4		4-373-20	C15 C14
TRANSMISSION INTERMEDIAIRE ZWISCHENGELENKWELLE INTERMEDIATE DRIVESHAFT TRANSMISION INTERMEDIA TRASMISSIONE INTERMEDIA			
– 4 × 4		4-373-30	C13
FREINS RADBREMSEN BRAKES FRENOS FRENI			
– **AVANT**	▶ 7/77	4-451-10	C12 C11
– **AVANT**	7/77 ▶	4-451-10A	C10 C09
– **ARRIERE** - 4 × 2		4-451-20	C08 C07
– **ARRIERE** - 4 × 4		4-451-30	C06 C05
TUYAUTERIES DE FREINS BREMSLEITUNGEN BRAKE PIPING TUBOS DE FRENOS CANALIZZAZIONI FRENI			
–	▶ 1/72	4-453-10	C04 C03
–	1/72 ▶ 7/76	4-453-10A	C02 C01
–	7/76 ▶ 7/77	4-453-10B	D01 D02
–	7/77 ▶ 7/78	4-453-10C	D03
– 4 × 2	7/78 ▷	4-453-10D	D04
– 4 × 4	▶ 12/79	4-453-11	D05
– 4 × 4	12/79 ▶ 10/81	4-453-11A	D06
– 4 × 4	10/81 ▶	4-453-11B	D07
	▶		
MAITRE-CYLINDRE HAUPTBREMSZYLINDER MASTER CYLINDER BOMBA DE FRENO CILINDRO MAESTRO			
–	▶ 7/76	4-453-20	D08 D09
– (B)	10/75 ▶ 7/76	4-453-21	D10
– (CH)	11/72 ▶ 7/76		
– (NL)	10/75 ▶ 7/76		
MAITRE-CYLINDRE TANDEM - RESERVOIR TANDEM-HAUPTBREMSZYLINDER UND BEHAELTER TANDEM MASTER-CYLINDER AND TANK BOMBA PRINCIPAL TANDEM DE FRENO - DEPOSITO CILINDRO MAESTRO TANDEM E SERBATOIO			
–	7/76 ▶ 6/78	4-453-22	D11 D12
– (MIN)	6/78 ▷	4-453-22A	D13 D14

CYLINDRES DE ROUES RADZYLINDER WHEEL CYLINDERS BOMBINES DE RUEDAS CILINDRI RUOTE			
– **AVANT (SYN)**	▶ 7/77	4-453-30	D15
– **ARRIERE (SYN)**	▶ 7/77	4-453-40	E15
– **ARRIERE (MIN)**	7/77 ▶	4-453-40A	E14
FREIN A MAIN HANDBREMSE HANDBRAKE FRENO DE MANO FRENO A MANO			
–	▶ 7/77	4-454-10	E13 E12
FREIN A MAIN - TIRETTE HANDBREMSE - HANDGRIFF HANDBRAKE - HANDLE FRENO DE MANO - TIRADOR FRENO A MANO - TIRANTE			
–	7/77 ▶	4-454-11	E11 E10
FREIN A MAIN - LEVIERS - CABLES HANDBREMSE - HEBEL UND ZUEGE HANDBRAKE - LEVERS AND CABLES FRENO DE MANO - LEVAS Y CABLES FRENO A MANO - LEVE E CAVI			
–	7/77 ▶	4-454-12	E09 E08
LIMITEUR DE FREIN ARRIERE BREMSBEGRENZER BRAKE LIMITER LIMITADOR DE FRENOS LIMITATORE FRENI			
– 4 × 4	12/79 ▶ 10/81	4-454-20	E07
– 4 × 4	10/81 ▶	4-454-20A	E06

137

4-314-10

B-03 ↑

PÉDALIER
PEDALWERK
PEDAL GEAR
PEDALES Y SOPORTE
PEDALIERA

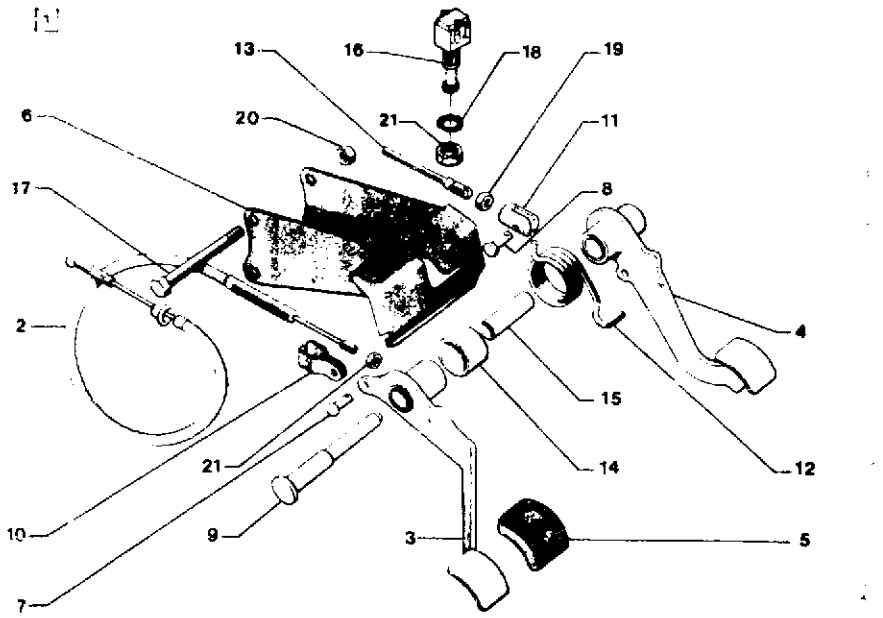

1	NUMEROS		K	►7/77	DESIGNATIONS
1	4AA	*5 414 879* RP 95 566 670	1	ENS 9/71►	**SUPPORT ET PÉDALES** TRAEGER MIT PEDALEN BRACKET WITH PEDALS SOPORTE CON PEDALES SUPPORTO CON PEDALI
2	4AA	95 494 917	1	LON 699	**CABLE DE DÉBRAYAGE** KUPPLUNGSZUG CLUTCH CABLE CABLE DE DESEMBRAGUE CAVO DISINNESTO

3	4AY	AY 314 3 A	1		**PÉDALE DE DÉBRAYAGE** KUPPLUNGSPEDAL CLUTCH PEDAL PEDAL DE DESEMBRAGUE PEDALE DISINNESTO
4	4AY	*AY 453 1 A*	1	NFP	**PÉDALE DE FREIN** BREMSPEDAL BRAKE PEDAL PEDAL DE FRENO PEDALE FRENO
5	4MA	95 575 913	2		**GARNITURE** PEDALGARNITUR PEDAL PAD GUARNICION COPRIPATTINO
6	4AY	*AY 453 58 A*	1	NFP ►9/71	**SUPPORT** TRAEGER BRACKET SOPORTE SUPPORTO
	4AA	*5 410 806*	1	NFP 9/72 ►	–
7	4AA	5 420 471	1	ϕ 5 - LON 14	**AXE** ACHSE PIN EJE PERNO
8	4AA	5 417 536	1	ϕ 6 x 20	–
9	4AY	5 410 804	1	ϕ 12 - LON 80 9/71 ►	–
10	4MA	AM 314 55	1		**CHAPE** GABELSTUECK CLEVIS ESTRIBO ATTACCO
11	4AM	*AM 453 192*	1	LON 26 - NFP ►5/69	–
	4AA	5 417 537	1	LON 34 5/69 ►	–
12	4AY	AY 453 25	1	4 SPIR - ϕ INT 30,5	**RESSORT** FEDER SPRING MUELLE MOLLA
13	4AY	*AY 453 73 A*	1	LON 123 -NFP ►5/69	**TIGE** STOESSELSTANGE PUSH-ROD VARILLA ASTA
	4AY	AY 453 73 B	1	LON 105,75 5/69 ►7/73	–
	4AA	5 438 258	1	LON 88 7/73 ►	–
			1	(CH) 6/73 ►	
14	4AY	AY 453 100	1	23 x 27 x 16	**ENTRETOISE** ABSTANDSHUELLE DISTANCE SLEEVE SEPARADOR DISTANZIALE
15	4AY	*AY 453 171*	1	9 x 12 x 40-NFP►9/71	–
16	5AY	5 420 474 RP 5 422 483 DEO 1 - 5 412 142	1	«AXO» ►9/74	**CONTACTEUR DE STOP** STOPPLICHTSCHALTER STOP LIGHT SWITCH CONTACTOR DE STOP CONTATTORE DELLO STOP
	5AU	5 422 483	1	«TORRIX» 9/73 ►	–

PÉDALIER (Suite)
PEDALWERK (Forts.)
PEDAL GEAR (Cont.)
PEDALES Y SOPORTE (Cont.)
PEDALIERA (Cont.)

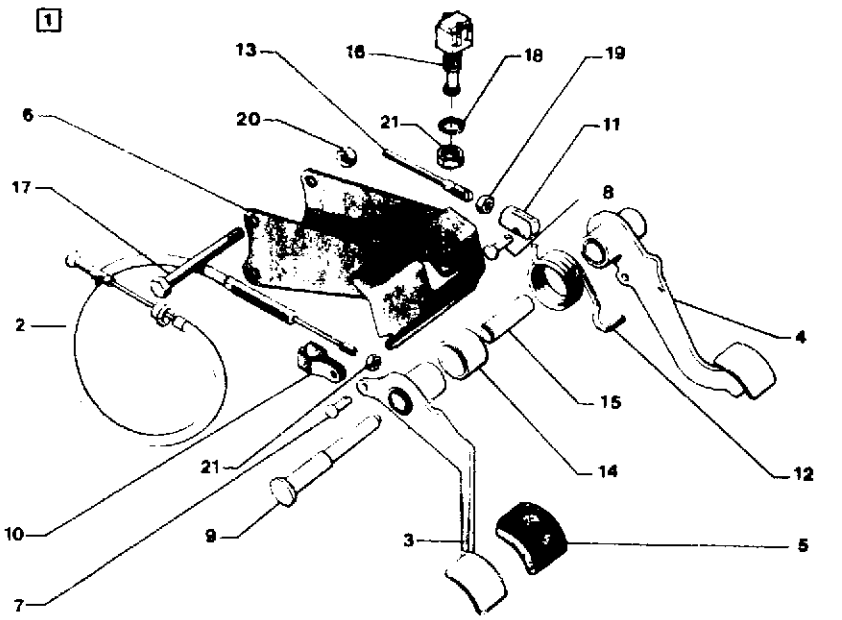

I	NUMEROS		K	▶7/77	DESIGNATIONS
17	9AY	23 836 019	2	TH 9 x 1,25 - 65	**VIS** SCHRAUBE SCREW TORNILLO VITE
18	9TT	79 03 056 020	1	CR ϕ 12,5 x 22	**RONDELLE** SCHEIBE WASHER ARANDELA RONDELLA
19	9TT	79 03 032 071	1	HE 7 x 1,00	**ÉCROU** MUTTER NUT TUERCA DADO
20	9TT	79 03 032 247	2	HE 9 x 1,25	–
21	4TT	26 150 069	2	HE 12 x 1,00 (CH) 11/72 ▶ 6/73	–
					PIECES SPÉCIALES SPEZIALTEILE SPECIAL PARTS PIEZAS ESPECIALES PEZZI SPECIALI
11	4AA	*5 438 884*	1	LON 115 - NFP	**TIGE DE POUSSÉE - DOUBLE CIRCUIT** STOESSELSTANGE F. DOPPEL-KREISLAUF PUSH ROD F. DOUBLE CIRCUIT VARILLA EMPUJADORA DE CIRCUITO DOBLE ASTA DI PRESSIONE PER CIRCUITO DOPPIO
	4AA	5 436 264 NFP	1		**SUPPORT MAITRE-CYLINDRE** HALTERUNG F. HE-ZYLINDER M.C. BRACKET SOPORTE DE C.P. SUPPORTO CYLINDRO-MAESTRO
	4AA	*5 436 266*	2	NFP	**ENTRETOISE** ABSTANDSSTUECK DISTANCE PIECE SEPARADOR DISTANZIALE

137
4-314-10-A
B-05

PÉDALIER
PEDALWERK
PEDAL GEAR
PEDALES Y SOPORTE
PEDALIERA

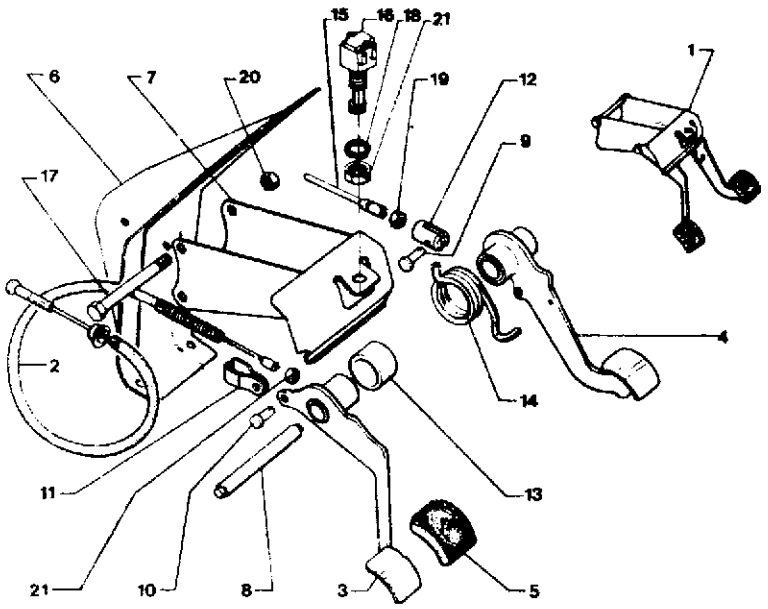

4-314-10A

I	NUMEROS		K	7/77 ▶	DESIGNATIONS
1	4AY	*75 515 583* RP 95 566 670	1	2/78 ▶	**SUPPORT ET PÉDALES ASSEMBLÉS** TRAEGER U. PEDALE INSGES. BRACKET AND PEDALS ASSY SOPORTE Y PEDALES UNIDOS SUPPORTO PEDALI ASSIEM.
2	4AA	95 494 917	1	LON 699	**CABLE DÉBRAYAGE** KUPPLUNGSZUG CLUTCH CABLE CABLE DE DESEMBRAGUE CAVO DISINNESTO FRIZIONE
3	4AY	AY 314 3 A	1		**PÉDALE DÉBRAYAGE** KUPPLUNGSPEDAL CLUTCH PEDAL PEDAL DE DESEMBRAGUE PEDALE DELLA FRIZIONE
4	4AY	*5 506 102*	1	NFP	**PÉDALE DE FREIN** BREMSPEDAL BRAKE PEDAL PEDAL DE FRENO PEDALE DEL FRENO
	4AA	95 575 913	1	4 x 4	–
5	4GX	*75 420 552* RP 95 575 913	2		**GARNITURE** PEDALGARNITUR PEDAL PAD GUARNICION COPRIPATINO
6	4AY	AYB 453 352 A	1		**SUPPORT** HALTERUNG BRACKET SOPORTE SUPPORTO
7	4AY	75 515 584	1		–
8	4AY	5 410 804	1	ϕ 12	**AXE** BOLZEN PIN EJE PERNO
9	4AA	5 417 536	1	ϕ 6 - LON 20	–
10	4AA	5 420 471	1	ϕ 5 - LON 14	–
11	4MA	*5 467 775* RP AM 314 55	1		**CHAPE** ENDSTUECK CLEVIS TERMINAL ATTACCO
12	4AA	5 417 537	1		–
13	4AY	AY 453 100	1	22,6 x 27 x 1,6	**BAGUE** BUECHSE BUSH CASQUILLO BOCCOLA
14	4AY	AY 453 25	1	ϕ 30,5 - LON 16	**RESSORT** FEDER SPRING MUELLE MOLLA
15	4AA	5 438 268	1	LON 88	**TIGE** STOESSELSTANGE PUSH ROD VARILLA ASTA
16	5AY	5 420 474 RP 5 422 483 DEO 1 - 5 412 142	1	«AXO» ▶9/74	**CONTACTEUR DE STOP** STOPPLICHTSCHALTER STOP LIGHT SWITCH CONTACTOR DE STOP CONTATTORE DELLO STOP
	5AU	5 422 483	1	«TORRIX» 9/73 ▶	–
	5GY	*95 494 332* RP 5 422 483	1	«BONNELLA» 10/80 ▶	–
17	9AY	*23 863 019* RP 23 836 019	2	TH 9 x 1,25	**VIS** SCHRAUBE SCREW TORNILLO VITE

PEDALIER (Suite)
PEDALWERK (Forts.)
PEDAL GEAR (Cont.)
PEDALES Y SOPORTE (Cont.)
PEDALIERA (Cont.)

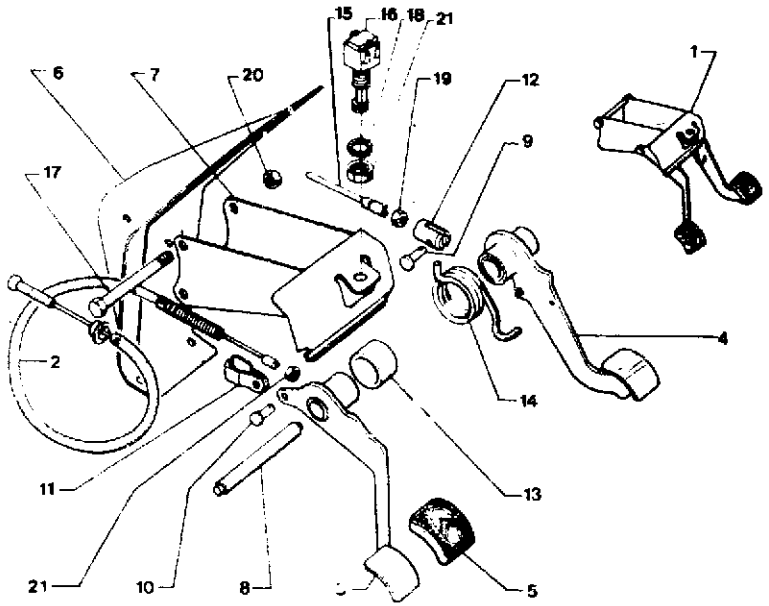

4-314-10A

	NUMEROS		K	7.77 ▶	DESIGNATIONS
8	9TT	79 03 056 020	1	CR ∅ 12,5×22	**ROND LE** SCHEIBE WASHER ARANDELA RONDELLA
9	9TT	79 03 032 036	1	HE 7×1,00	**ECROU** MUTTER NUT TUERCA DADO
	9TT	79 03 032 247	2	HE 9×1,25	—
	4TT	26 151 069	2	HE 12×1,00	—

137
4–341–10
B–07

CRABOT DIFFÉRENTIEL
HINTERES DIFFERENTIAL
REAR DIFFERENTIAL
ENGRANE Y DIFERENCIAL TRAS.
INNESTO DIFFERENZIALE POST.

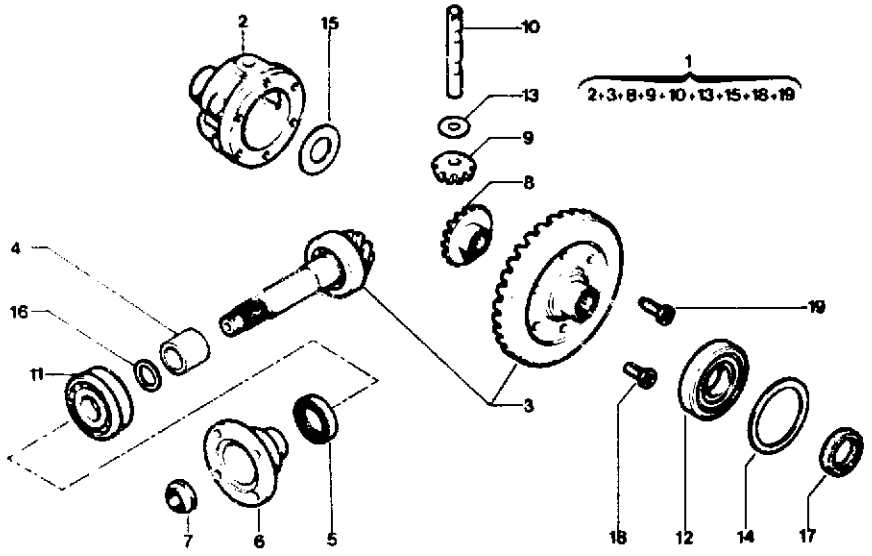

I	NUMEROS		K	4 x 4	DESIGNATIONS
1	4FF	75 498 329	1		**DIFFÉRENTIEL ASSEMBLÉ** DIFFERENTIAL INSGESAMT DIFFERENTIAL ASSY DIFERENCIAL UNIDO DIFFERENZIALE ASSIEMATO
2	1AA	AZ 343 1	1		**BOITIER DE DIFFÉRENTIEL** DIFFERENTIALGEHAEUSE DIFFERENTIAL CASING CAJA DEL DIFERENCIAL SCATOLA DIFFERENZIALE
3	4FF	75 498 323	1		**COUPLE CONIQUE** TELLER UND KEGELRAD CROWN WHEEL AND PINION GRUPO CONICO COPPIA CONICA
4	4FF	75 498 327	1		**ENTRETOISE DU PIGNON** ABSTANDSSTUECK F. K-RAD PINION SPACER SEPARADOR DE PINON DISTANZIALE PIGNONE
5	4FF	75 498 278	1		**JOINT D'ÉTANCHÉITÉ** DICHTHUELSE SEALING BUSH JUNTA DE ESTANQUEIDAD GUARNIZIONE DI TENUTA
6	4FF	75 498 279	1		**BRIDE D'ACCOUPLEMENT** KUPPLUNGSFLANSCH COUPLING FLANGE BRIDA DE ACOPLAMIENTO FLANGIA ACCOPPIAMENTO
7	4FF	75 498 280	1		**ÉCROU DE BRIDE** MUTTER F. FLANSCH FLANGE NUT TUERCA DE BRIDA DADO PER FLANGIA
8	1FF	75 524 215	2		**PLANÉTAIRE** PLANETENRAD PLANET WHEEL PLANETARIO PLANETARIO
9	4FF	95 498 491	2		**SATELLITE** SATELLITENRAD SATELLITE PINION SATELITE SATELLITE
10	1AM	AM 343 4 A	1		**AXE** ACHSE SPINDLE EJE PERNO
11	1GX	95 572 594	1		**ROULEMENT DOUBLE** DOPPELKUGELLAGER DOUBLE BALL-BEARING RODAMIENTO DOBLE CUSCINETTO A SFERE DOPPIO
12	1AA	26 203 529	2	φ 35 x 27 x 17	**ROULEMENT** KUGELLAGER BALL-BEARING RODAMIENTO CUSCINETTO A SFERE
13			2	φ 13 x 28	**RONDELLE DE RÉGLAGE** EINSTELLSCHEIBE ADJUSTING WASHER ARANDELA DE AJUSTE RONDELLA DI REGOLAZIONE
	1AM	AM 343 8		E 1,47	–
	1AM	AM 343 8 B		E 1,61	–
	1AM	AM 343 8 D		E 1,75	–
	1AM	AM 343 8 F		E 1,89	–
	1AM	AM 343 8 H		E 2,03	–

CRABOT DIFFÉRENTIEL (Suite)
HINTERES DIFFERENTIAL (Forts.)
REAR DIFFERENTIAL (Cont.)
ENGRANE Y DIFERENCIAL TRAS. (Cont.)
INNESTO DIFFERENZIALE POST. (Cont.)

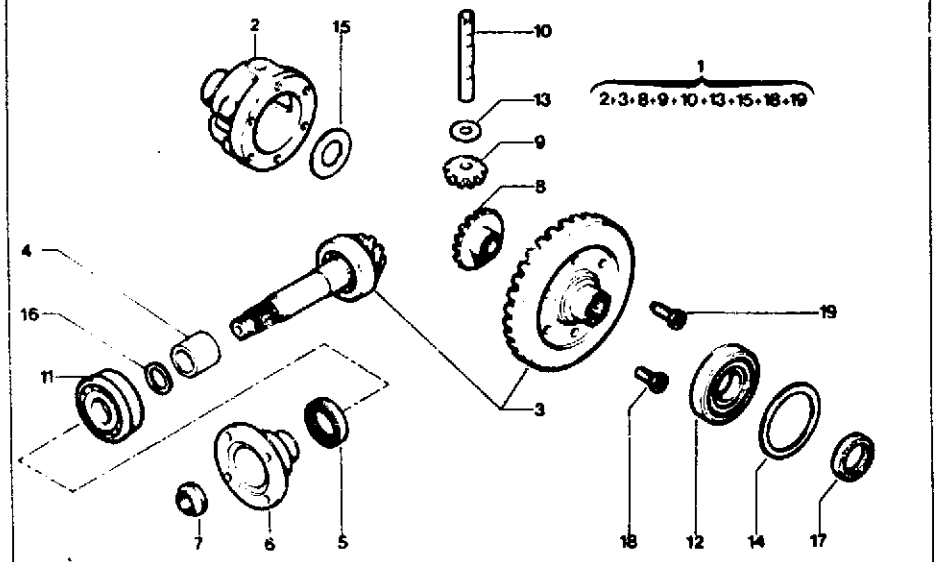

I	NUMEROS	K	4 x 4	DESIGNATIONS
13		2	ϕ 13 x 28	**RONDELLE DE RÉGLAGE (Suite)** EINSTELLSCHEIBE (Forts.) ADJUSTING WASHER (Cont.) ARANDELA DE AJUSTE (Cont.) RONDELLA DI REGOLAZIONE (Cont.)
	1AM AM 343 8 J		E 2,17	–
	1AM AM 343 8 L		E 2,31	–
14		2	ϕ 62 x 72	
	1AA A 343 98		E 0,05	–
	1AA A 343 98 A		E 0,10	–
	1AA A 343 98 B		E 0,20	–
	1AA A 343 98 C		E 0,50	–
	1AA A 343 98 D		E 1,00	–
15		2	ϕ 28,5 x 52	
	1AM AM 343 7		E 1,35	–
	1AM AM 343 7 B		E 1,47	–
	1AM AM 343 7 D		E 1,59	–
	1AM AM 343 7 F		E 1,71	–
16		1	ϕ 25 x 32	**CALE DE RÉGLAGE** EINSTELLUNTERLAGE ADJUSTING SHIM SUPLEMENTO DE AJUSTE SPESSORE DI REGOLAZIONE
	1GX GX 09 104 01 A		E 2,50	–
	1GX GX 09 104 02 A		E 2,54	–
	1GX GX 09 104 03 A		E 2,58	–
	1GX GX 09 104 04 A		E 2,62	–
	1GX GX 09 104 05 A		E 2,66	–
	1GX GX 09 104 06 A		E 2,70	–
	1GX GX 09 104 07 A		E 2,74	–
	1GX GX 09 104 08 A		E 2,78	–
	1GX GX 09 104 09 A		E 2,82 - **NFP**	–
	1GX GX 09 104 10 A		E 2,86	–
	1GX GX 09 104 11 A		E 2,90	–
	1GX GX 09 104 12 A		E 2,94	–
	1GX GX 09 104 13 A		E 2,98	–
	1GX GX 09 104 14 A		E 3,02	–
	1GX GX 09 104 15 A		E 3,06	–
	1GX GX 09 104 16 A		E 3,10	–
	1GX GX 09 104 17 A		E 3,14	–
	1GX GX 09 104 18 A		E 3,18	–
	1GX GX 09 104 19 A		E 3,22	–
	1GX GX 09 104 20 A		E 3,26	–
	1GX GX 09 104 21 A		E 3,30	–
	1GX GX 09 104 22 A		E 3,34	–
	1GX GX 09 104 23 A		E 3,38	–
	1GX GX 09 104 24 A		E 3,42	–
	1GX GX 09 104 25 A		E 3,46	–
	1GX GX 09 104 26 A		E 3,50	–
	1GX GX 09 104 27 A		E 3,54	–
	1GX GX 09 104 28 A		E 3,58	–
	1GX GX 09 104 29 A		E 3,62	–
	1GX GX 09 104 30 A		E 3,66	–
	1GX GX 09 104 31 A		E 3,70	–
	1GX GX 09 104 32 A		E 3,74	–
	1GX GX 09 104 33 A		E 3,78	–
	1GX GX 09 104 34 A		E 3,82	–
17	4TT ZC 9 612 644 U	2		**BAGUE DE PALIER** LAGERBUECHSE BEARING BUSH CASQUILLO COJINETE BOCCOLA CUSCINETTO
18	1GX 75 527 576	5	TH 10x 22	**VIS** SCHRAUBE SCREW TORNILLO VITE
19	1AA AZ 343 5	1	TH 10 x 28	–

137
4–341–11
B-09

CRABOT DIFFÉRENTIEL – CARTER
GEHAEUSE DES HINTEREN DIFFERENTIALS
REAR DIFFERENTIAL CASING
CARTER DEL DIFERENCIAL TRAS.
SCATOLA DIFFERENZIALE POST.

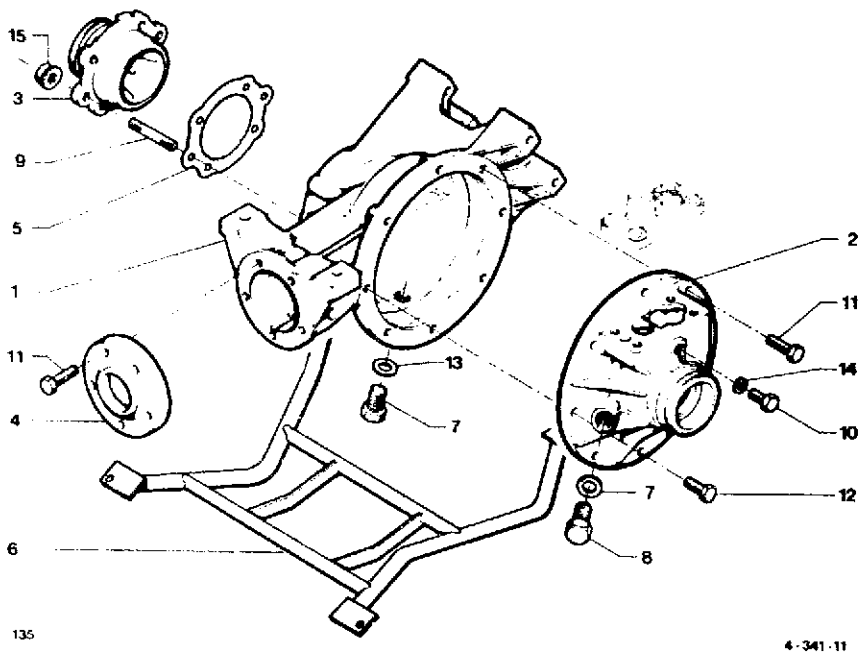

I	NUMEROS		K	4 x 4	DESIGNATIONS
1	4FF	75 498 321	1		**CARTER DE PONT** GEHAEUSE CASING CARTER SCATOLA
2	4FF	75 498 333	1	G	**COUVERCLE DE CARTER** DECKEL F. GEHAEUSE CASING COVER TAPA DEL CARTER COPERCHIO SCATOLA
3	4FF	75 498 365	1	D	**PALIER ARBRE DIFFÉRENTIEL** LAGER F. WELLE SHAFT BEARING SOPORTE DEL ARBOL DIFER. SUPPORTO ALBERO DIFF.
4	4FF	75 498 328	1		**CHAPEAU** DECKEL CAP SOMBRERETE CAPPELLO
5	1AM	AM 331 86 A	1		**JOINT D'ÉTANCHÉITÉ** DICHTUNG SEAL JUNTA DE ESTANQUEIDAD GUARNIZIONE TENUTA
6	4CA	95 550 778	1		**CADRE DE PROTECTION** SCHUTZRAHMEN PROTECTION FRAME MARCO DE PROTECCION QUADRO DI PROTEZIONE
7	1MA	95 573 978	1		**BOUCHON** DECKEL COVER TAPON TAPPO
8	1BF	75 411 382	1		–
9	1TT	26 165 009	6	ϕ 9 x 1,25 - 43	**GOUJON** STEHBOLZEN STUD ESPARRAGO PRIGIONIERO
10	9TT	*79 03 101 053* RP 79 03 201 010	1	TH 5 x 10	**VIS** SCHRAUBE SCREW TORNILLO VITE
11	9GX	23 720 019 - NFP	12	TH 7 x 25	–
12	9MA	79 03 001 708	1	TH 7 x 20	–
13	9TT	22 478 009	2	ϕ 16 x 22	**RONDELLE** SCHEIBE WASHER ARANDELA RONDELLA
14	9AA	79 03 058 038	1	ϕ 5 x 16 - NFP	–
15	4TT	ZC 9 615 030 U	6	HEMB 9 x 1,25	**ÉCROU** MUTTER NUT TUERCA DADO

137

4-341-20

B-10

COMMANDE DE CRABOT
DIFFERENTIALSCHALTUNG
DIFFERENTIAL CONTROL
MANDO ENGRANE DIFERENCIAL
COMANDO INNESTO DIFFERENZIALE

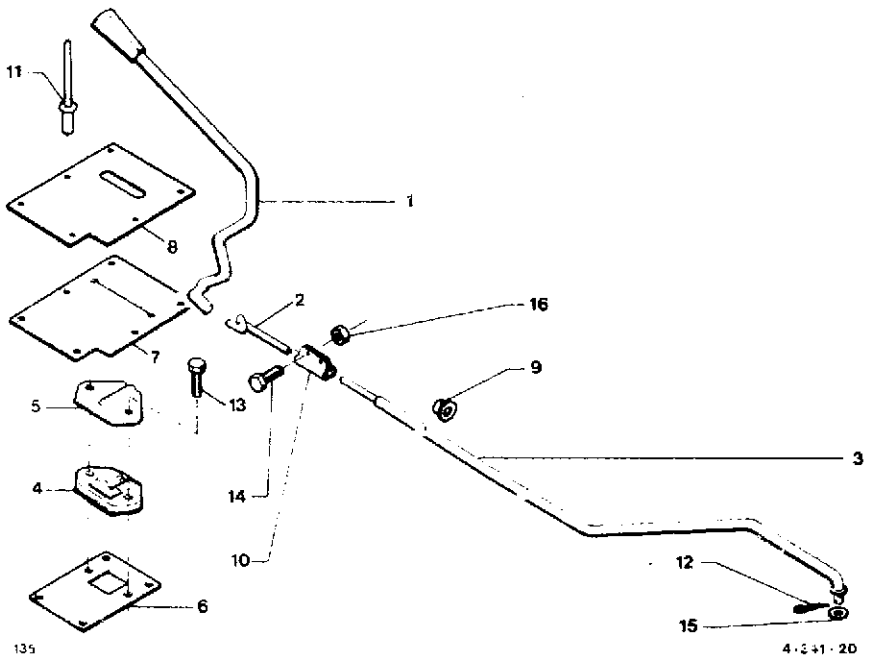

I	NUMEROS		K	4 x 4 ▶ 6/81	DESIGNATIONS
1	4FF	75 498 369	1	ϕ 7,6	**LEVIER DE COMMANDE** SCHALTHEBEL CONTROL LEVER PALANCA DE MANDO LEVA DI COMANDO
2	4FF	75 498 373	1	AV - LON 70 - ϕ6,1	**TIGE DE COMMANDE** SCHALTSTANGE CONTROL ROD VARILLA DE MANDO ASTA DI COMANDO
3	4FF	75 498 374	1	CENT - LON 1421	—
4	3GX	5 431 636	1		**PALIER** LAGERUNGSPLATTE BEARING PLATE SOPORTE SUPPORTO
5	3XB	5 426 325	1		**CHAPEAU** DECKEL BEARING COVER TAPA DEL SOPORTE COPERCHIO SUPPORTO
6	4CA	*75 498 371*	1	INF - LON 106 4 ϕ5,5 NFP	**PLAQUE** PLATTE PLATE PLACA PIASTRA
7	4CA	*75 498 372*	1	CC - LON 152 - 6 ϕ7,2 NFP	—
8	4CA	*95 5 5 065 * 405*	1	NFP	—
	4CA	*95 545 065 * 508*	1	NFP	—
	4CA	*95 545 065 * 524*	1	NFP	—
	4CA	*95 545 065 * 824*	1	NFP	—
9	4FF	95 545 007	2	ϕ 14,7 - LON 10,3	**CANON DE GUIDAGE** FUEHRUNGSSTUECK GUIDING PIECE PIEZA DE GUIA PEZZO GUIDA
10	3GX	GX 20 236 01 A	1		**MANCHON** MUFFE SLEEVE MANGUITO MANICOTTO
11	7AY	79 03 072 265	6	ϕ 4,8 - «POP»	**RIVET** NIET RIVET REMACHE RIVETTO
12	6BF	ZF 10 734 201 L **NFP**	1	ϕ 2 - LON 15	**GOUPILLE FENDUE** KERBSTIFT SPLIT PIN GRUPILLA HENDIDA COPIGLIA TAGLIATA
13	9TT	79 03 201 011	6	TH 5 x 12	**VIS** SCHRAUBE SCREW TORNILLO VITE
14	9GX	79 03 201 130	2	TH 5 x 16	—
15	9GX	22 541 019	1	15 x 8,5 x 2	**RONDELLE** SCHEIBE WASHER ARANDELA RONDELLA
16	9TT	79 03 032 006	2	HE 5 x 0,80	**ÉCROU** MUTTER NUT TUERCA DADO

137
4–341–20 –A
B–11

COMMANDE DE CRABOT
DIFFERENTIALSCHALTUNG
DIFFERENTIAL CONTROL
MANDO ENGRANE DIFERENCIAL
COMANDO INNESTO DIFFERENZIALE

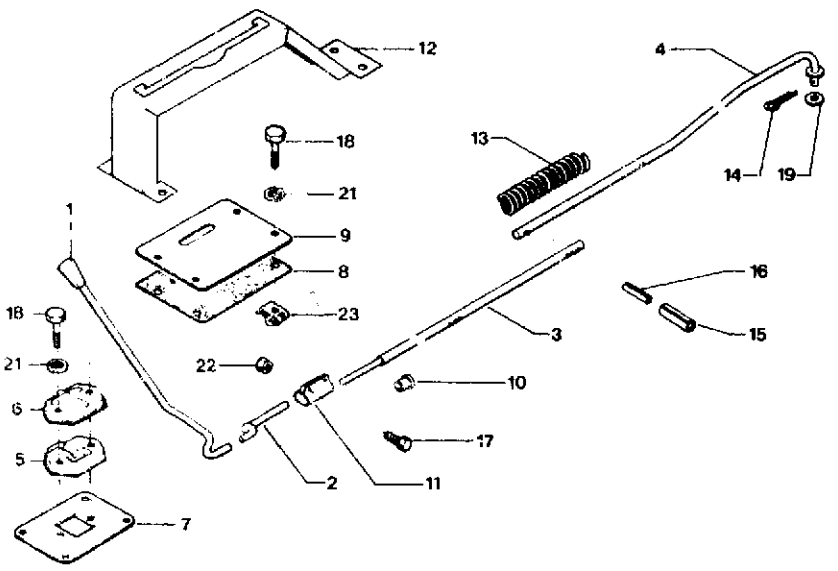

136 4-341-20A

I	NUMEROS		K	4 x 4 6/81 ▶	DESIGNATIONS
1	3GY	95 534 391 NFP	1		**LEVIER DE COMMANDE** SCHALTHEBEL CONTROL LEVER PALANCA DE MANDO LEVA DI COMANDO
2	4FF	75 498 373		AV ϕ 6,1 - LON 70	**TIGE DE COMMANDE** SCHALTSTANGE CONTROL ROD VARILLA DE MANDO ASTA DI COMANDO
3	4CA	95 569 007	1	CENT - 6 ϕ 3,5	–
4	4CA	95 569 008	1	AR - 2 ϕ 3,5	–
5	3GX	5 431 636	1		**PALIER** LAGERUNGSPLATTE BEARING PLATE SOPORTE SUPPORTO
6	3GX	5 426 325	1		**CHAPEAU DE PALIER** DECKEL BEARING COVER TAPA DEL SOPORTE COPERCHIO SUPPORTO
7	4CA	95 569 006	1	INF	**PLAQUE** PLATTE PLATE PLACA PIASTRA
8	4CA	95 568 840	1	CC - LON 160 - 4ϕ10	–
9	4CA	*95 568 839*	1	SUP-LON 160 - NFP	–
10	4FF	95 545 007	2	ϕ 14,7 - LON 10,3	**CANON DE GUIDAGE** FUEHRUNGSSTUECK GUIDING PIECE PIEZA DE GUIA PEZZO GUIDA
11	3GX	GX 20 236 01 A	1		**MANCHON** MUFFE SLEEVE MANGUITO MANICOTTO
12	4CA	95 568 841	1		**CONSOLE** KONSOLE CONSOLE CONSOLA MENSOLA
13	4CA	95 569 009	1		**RESSORT** FEDER SPRING MUELLE MOLLA
14	9SM	22 421 019 NFP	1		**GOUPILLE** PASSS-STIFT PIN GRUPILLA COPIGLIA
15	9CA	79 03 067 123	4	ϕ 3,5 - «MECANINDUS»	–
16	9CA	79 03 067 094	4	ϕ 2,5 - «MECANINDUS»	–
17	9GX	79 03 201 130	8	TH 5 x 12	**VIS** SCHRAUBE SCREW TORNILLO VITE
18	9TT	23 707 019	8	TH 7 x 1,00 - 28	–
19	9GX	22 541 019	1	15 x 8,5 x 2	**RONDELLE** SCHEIBE WASHER ARANDELA RONDELLA
20	9AA	79 03 058 027	6		–
21	9CA	79 03 058 040	8	CO 7,2 x 22 x 1,4	–
22	9TT	79 03 032 006	2	HE 5 x 0,80	**ÉCROU** MUTTER NUT TUERCA DADO
23	7TT	26 158 209	4		–

137

4-341-21

B-12

CRABOT - AXES ET FOURCHETTE
DIFFERENTIALSCHALTGABEL
DIFFERENTIAL COUPLING FORK
EJES Y HORQUILLA DE DIFERENCIAL
PERNI E FORCELLA DIFFERENZIALE

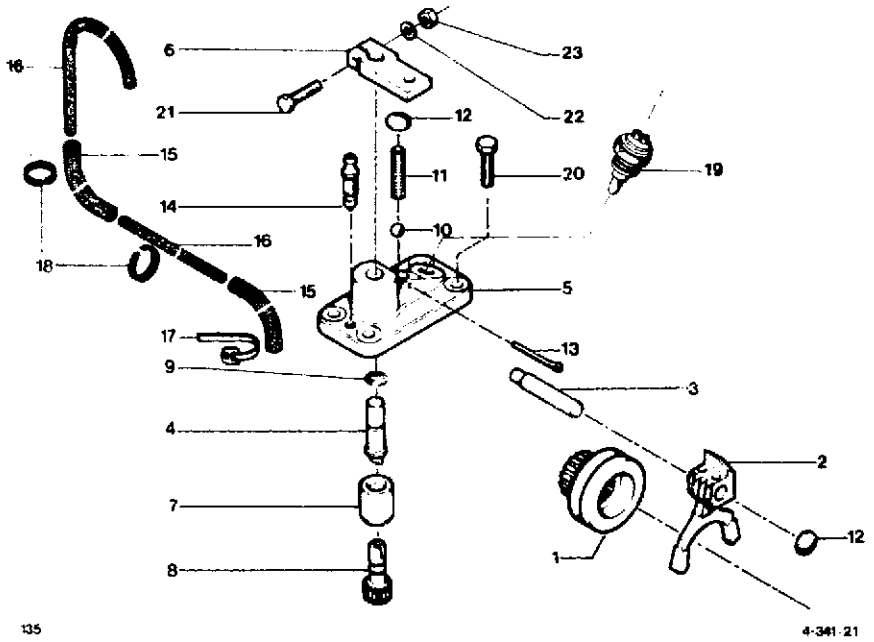

135 4-341-21

I	NUMEROS		K	4 x 4	DESIGNATIONS
1	4FF	75 498 339	1		**CRABOT BALADEUR** SCHIEBEMUFFE SLIDING SLEEVE DESPLAZABLE SCORREVOLE
2	4FF	75 498 340	1		**FOURCHETTE** GABEL FORK HORQUILLA FORCELLA

3	4FF	75 498 341	1			**AXE** BOLZEN PIN EJE PERNO
4	4FF	*75 498 343*	1	NFP		–
5	4FF	*75 498 342*	1	NFP	▶ 6/81	**SUPPORT** HALTERUNG BRACKET SOPORTE SUPPORTO
	4CA	*95 570 290*	1	NFP	6/81 ▶	–
6	4FF	75 498 344	1			**LEVIER CDE DE CRABOT** SCHALTHEBEL COUPLING LEVER PALANCA MANDO LEVA COMANDO
7	4FF	75 498 346	1			**BAGUE** BUECHSE BUSH CASQUILLO BOCCOLA
8	4FF	75 498 347	1	CDE		**PIGNON** RITZEL PINION PIÑON INGRANAGGIO
9	9TT	95 587 148	1			**JOINT ROTIQUE** DICHTRING SEALING RING JUNTA TORICA GOMMINO
10	9RB	24 113 009	1	φ 7,5	▶ 6/81	**BILLE** KUGEL BALL BOLA SFERA
11	1AM	AM 334 11	1		▶ 6/81	**RESSORT** FEDER SPRING MUELLE MOLLA
12	9TT	24 797 009	2			**BOUCHON** STOPFEN PLUG TAPON TAPPO
13	9BF	22 608 019 **NFP**	1		▶ 6/81	**GOUPILLE** PASSSTIFT PIN GRUPILLA COPIGLIA
14	4AA	*AZ 453 123* RP 95 578 347 DEO 1 - 79 41 401 043	1			**VIS DE PURGE** ENTLUEFTUNGSSCHRAUBE DRAIN SCREW TORNILLO DE PURGA VITE DI SPURGO
15	6AA	26 231 689	2	CC - φ 5 x 12 - LON 80		**TUBE** ROHR PIPE TUBO TUBO
16	6CA	79 05 026 709	2	φ 4 x 6 - «RILSAN»		–

CRABOT – AXES ET FOURCHETTE (Suite)
DIFFERENTIALSCHALTGABEL (Forts.)
DIFFERENTIAL COUPLING FORK (Cont.)
EJES Y HORQUILLA DE DIFERENCIAL (Cont.)
PERNI E FORCELLA DIFFERENZIALE (Cont.)

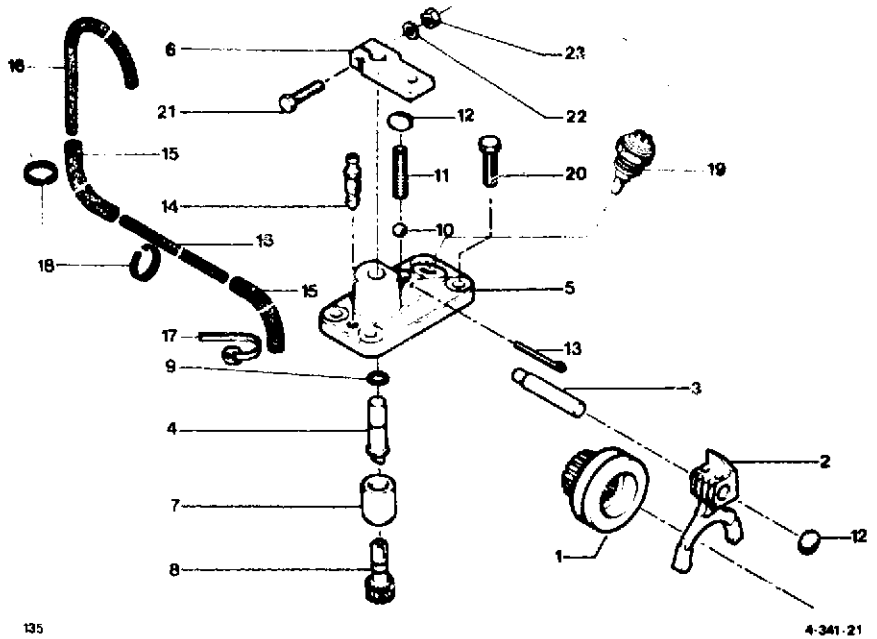

I	NUMEROS		K	4 x 4	DESIGNATIONS
17	3TT	79 03 083 153	1	LON 240	**COLLIER** SCHELLE FASTENING STRIP COLLAR FASCETTA
18	5AM	26 142 199	3	LON 100	–
19	1MA	75 491 289	1		**CONTACTEUR** SCHALTER SWITCH CONTACTOR CONTATTORE
20	9GX	23 720 019 **NFP**	4	TH 7 x 1,00 - 25	**VIS** SCHRAUBE SCREW TORNILLO VITE
21	9MA	24 325 039	1	TH 6 x 1,00 - 25	–
22	9AA	79 03 058 029	1		**RONDELLE** SCHEIBE WASHER ARANDELA RONDELLA
23	98F	25 260 019	1	HE 6 x 1,00	**ÉCROU** MUTTER NUT TUERCA DADO

137

4-373-10

B-14

TRANSMISSIONS AVANT
GELENKWELLEN
DRIVESHAFTS
TRANSMISIONES
TRASMISSIONI

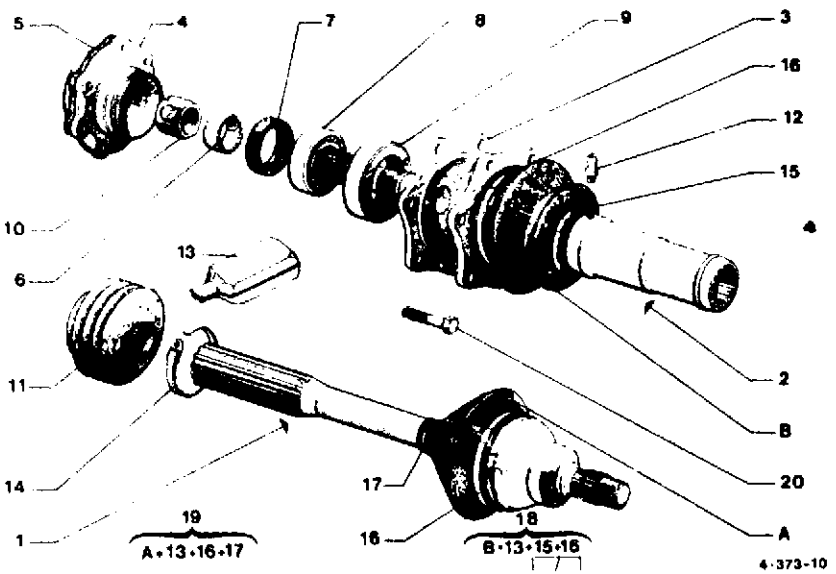

1	NUMEROS		K	4 x 2 / 4 x 4		DESIGNATIONS
1	4AA	*5 488 989*	2		9/79 ▶	**TRANSMISSION COTÉ ROUE**
		RP 75 525 808				GELENKWELLE, RADSEITE
						DRIVESHAFT, WHEEL SIDE
						TRANSMISION, LADO RUEDA
						TRASMISSIONE, LATO RUOTA
	4FF	75 498 216	2	4 x 4		–
2	4AA	75 516 490	2		4/80 ▶	**TRANSMISSION, COTÉ BV**
						GELENKWELLE, GETRIEBESEITE
						DRIVESHAFT, GEAR-BOX SIDE
						TRANSMISION, LADO CAJA VEL.
						TRASMISSIONE , LATO S.C.

3	4AM	95 566 706	2	LON 156		**ARBRE**
						WELLE
						SHAFT
						ARBOL
						ALBERO
4	4AM	AM 371 3	1	G	▶ 7/77	**PALIER**
						LAGER
						BEARING
						SOPORTE
						SUPPORTO
	4AM	AM 371 3 B	2	G	7/77 ▶	–
	4AM	AM 371 3 A	1	D	▶ 7/77	–
	4AM	AM 371 3 C	2	D	7/77 ▶	–
5	1AM	AM 331 86 A	2			**JOINT DE PALIER**
						LAGERDICHTUNG
						BEARING JOINT
						JUNTA DE SOPORTE
						GUARNIZIONE DEL SUPPORTO
6	4AM	AM 371 92	2	25 x 31 x 11		**ENTRETOISE**
						ABSTANDSBUECHSE
						DISTANCE BUSH
						SEPARADOR
						DISTANZIALE
7	4TT	ZC 9 612 644 U	2	31 x 42 x 8		**BAGUE D'ÉTANCHÉITÉ**
						DICHTHUELSE
						SEALING BUSH
						CASQUILLO DE ESTANQUEIDAD
						BOCCOLA DI TENUTA
8	1AM	79 03 090 190	2	25 x 52 x 15		**ROULEMENT A BILLES**
						KUEGELLAGER
						BALL BEARING
						RODAMIENTO DE BOLAS
						CUSCINETTO A SFERE
9	4GX	75 527 579	2	⌀ 61 x 1,50		**ÉCROU**
						MUTTER
						NUT
						TUERCA
						DADO
10	4CA	95 498 712	2	HE 25 x 1,50	10/79 ▶	–
11	4AA	A 372 88 A	2			**GAINE**
						DICHTSTULPEN
						DUST COVER
						GUARDA-POLVO
						PARAPOLVERE
	4RB	5 506 772	4	4 x 4		–
12	4TT	95 602 714	2	⌀ 7 x 1,00		**GRAISSEUR**
						SCHMIERNIPPEL
						LUBRICATOR
						ENGRASADOR
						INGRASSATORE
13	4GX	95 615 129	?	80 grs		**BERLINGOT**
						SCHMIERFETT
						GREASE
						GRASA
						GRASSA

TRANSMISSIONS AVANT (Suite)
GELENKWELLEN (Forts.)
DRIVESHAFTS (Cont.)
TRANSMISIONES (Cont.)
TRASMISSIONI (Cont.)

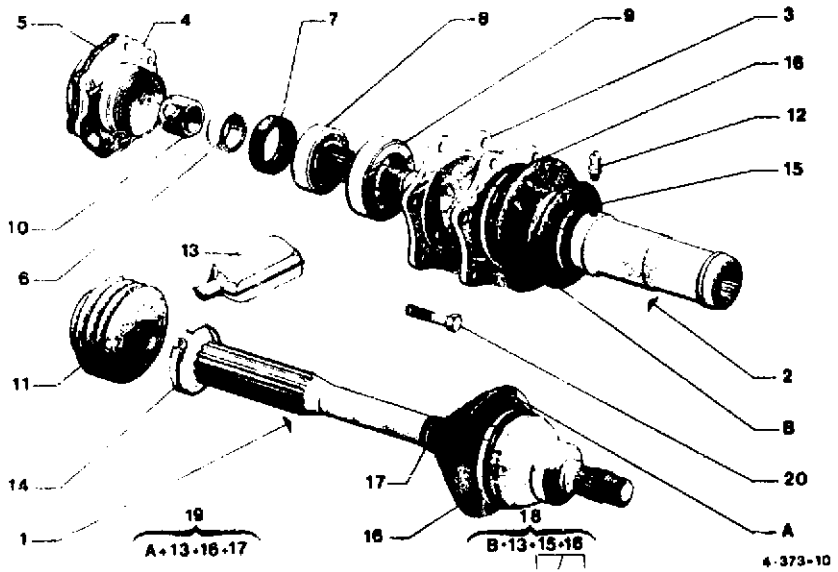

I	NUMEROS		K	4 x 2 4 x 4	DESIGNATIONS
14	2BF	22 862 029 RP 79 03 083 250	2	LON 360	**COLLIER** *SCHELLE* COLLAR COLLAR COLLARE
15	3TT	ZC 9 614 000 U RP 79 03 083 250	2	LON 474	–
16	4TT	79 03 083 156	4	LON 765	
17	4MA	79 03 083 153	2	LON 240	–
18	4RB	95 532 947	2	ENS «PAM»	**ÉTANCHÉITÉ COTÉ BV** DICHTKAPPE, GETRIEBESEITE SEALING CAP, GEARBOX SIDE ESTANQUEIDAD LADO CAJA VEL. TENUTA LATO S.C.
19	4AA	95 532 941	2	ENS «PAM»	**ÉTANCHÉITÉ COTÉ ROUE** DICHTKAPPE (RADSEITE) SEALING CAP (WHEEL SIDE) ESTANQUEIDAD (LADO RUEDA) TENUTA (LATO RUOTA)
	4RB	95 532 946	4	ENS - 4 x 4	–
20	4GX	75 527 610	12	TH 9 x 1,25 - 26	**VIS** SCHRAUBE SCREW TORNILLO VITE

10/72 ▶

137

4-373-20

C-15 ↓

TRANSMISSIONS ARRIERE
GELENKWELLEN, HINTERE
DRIVESHAFTS, REAR
TRANSMISIONES TRAS.
TRASMISSIONI POST.

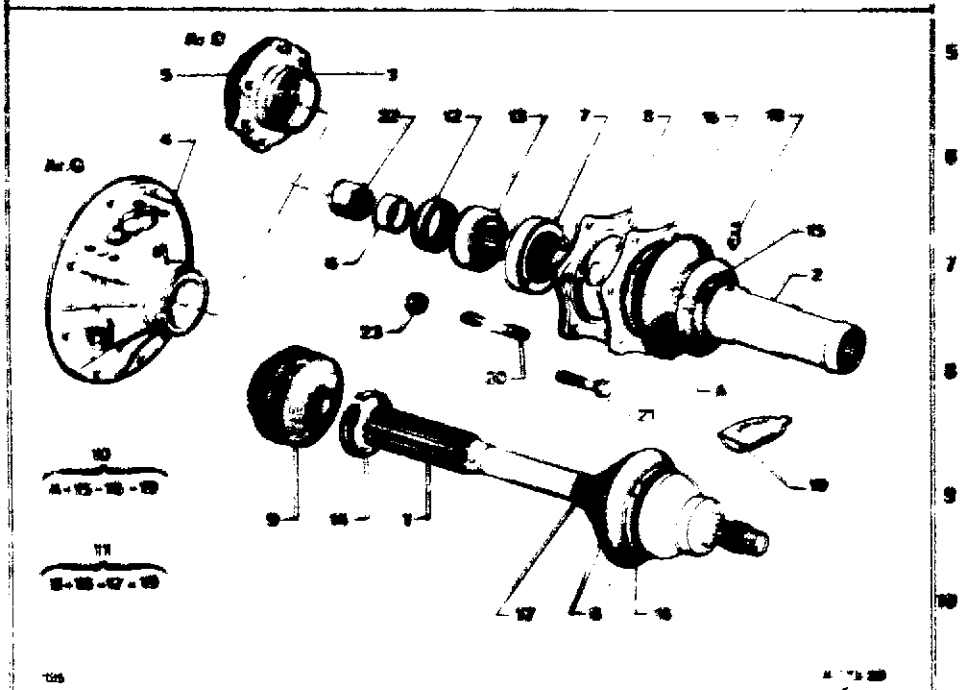

I	NUMEROS		K	4 x 4	DESIGNATIONS
1	4FF	75 498 216	2		**TRANSMISSION COTE ROUE** GELENKWELLE, RADSEITE DRIVESHAFT, WHEEL SIDE TRANSMISION, LADO RUEDA TRASMISSIONE, LATO RUOTA
2	4AZ	75 516 400	2	4AB ▶ WHPS 488 992	**TRANSMISSION COTE PONT** GELENKWELLE, DIFFER. SEITE DRIVESHAFT, DIFFER. SIDE TRANSMISION, LADO PUENTO TRASMISSIONE, LATO PONTE

3	4FF	75 498 335	1	D	**PALIER** LAGER BEARING SOPORTE SUPPORTO
4	4FF	75 498 333	1	G	**COUVERCLE** DECKEL COVER TAPA COPERCHIO
5	1AB	AB 331 88 A	1	D	**JOINT DE PALIER** LAGERDICHTUNG BEARING JOINT JUNTA DE SOPORTE GUARNIZIONE DEL SUPPORTO
6	4AB	AB 771 92	2		**ENTRETOISE** ABSTANDSSTUECK SPACER SEPARADOR DISTANZIALE
7	4GX	75 527 579	2	⌀ 61 x 1,50	**ÉCROU DE ROULEMENT** MUTTER F. LAGER NUT F. BEARING TUERCA DEL RODAMIENTO DADO PER CUSCINETTO
8	4FF	75 498 331	1	D	**ARBRE DE DIFFÉRENTIEL** DIFFERENTIALWELLE DIFFERENTIAL SHAFT ARBOL DEL DIFERENCIAL ALBERO DIFFERENZIALE
9	4FF 4RB	75 498 334 5 586 772	1 2	G C C	**GAINE DES ARBRES** HUELLE F. WELLEN SHAFT SHEATH VAINA DE ARBOLES GUAINA PER ALBERI
10	4RB	95 532 947	2	ENS «PAR»	**GAINE COTÉ PONT** HUELLE, DIFFER.-SEITE SHEATH, DIFFER. SIDE VAINA LADO PUENTE GUAINA LATO PONTE
11	4RB	95 532 946	2	ENS «PAR»	**GAINE COTÉ ROUE** HUELLE, RADSEITE SHEATH, WHEEL SIDE VAINA LADO RUEDA GUAINA LATO RUOTA
12	4TT	ZC 9 612 004 0	2	31 x 42 x 8	**BAGUE D'ÉTANCHÉITÉ** DICHTHUELSE SEALING BUSH CASQUILLO ESTANQUEIDAD BOCCOLA DI TENUTA
13	1AB	79 03 000 190	2	25 x 52 x 15	**ROULEMENT** LAGER BEARING RODAMIENTO CUSCINETTO

TRANSMISSIONS ARRIERE
GELENKWELLEN, HINTERE
DRIVESHAFTS, REAR
TRANSMISIONES TRAS.
TRASMISSIONI POST.

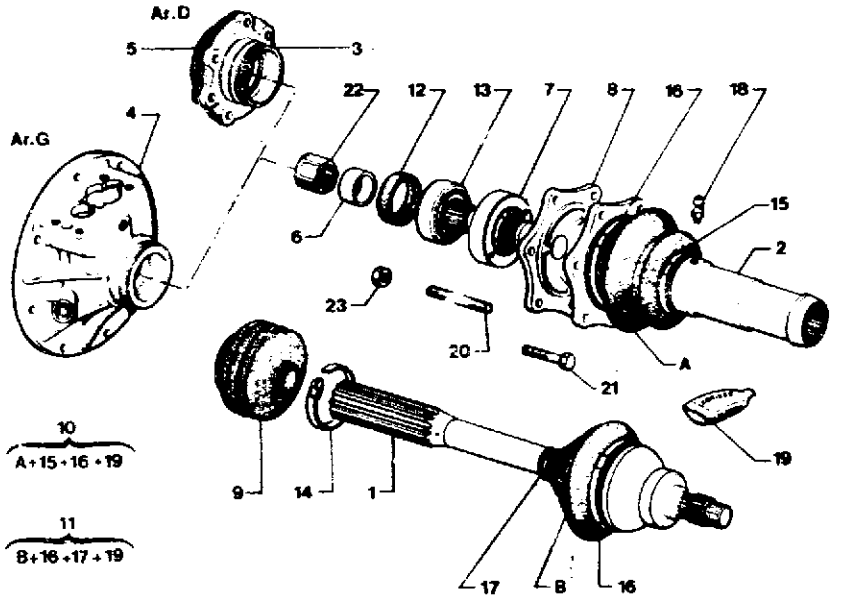

135

4-373-20

I	NUMEROS		K	4 x 4	DESIGNATIONS
1	4FF	75 498 216	2		**TRANSMISSION COTÉ ROUE** GELENKWELLE, RADSEITE DRIVESHAFT, WHEEL SIDE TRANSMISION, LADO RUEDA TRASMISSIONE, LATO RUOTA
2	4AZ	75 516 490	2	4/80 ▶ RMP5 488 993	**TRANSMISSION COTÉ [illegible]NT** GELENKWELLE, DIFFER.-SEITE DRIVESHAFT, DIFFER. SIDE TRANSMISION, LADO PUENTO TRASMISSIONE, LATO PONTE

4	4FF	75 498 333	1	G	**COUVERCLE** DECKEL COVER TAPA COPERCHIO
5	1AM	AM 331 86 A	1	D	**JOINT DE PALIER** LAGERDICHTUNG BEARING JOINT JUNTA DE SOPORTE GUARNIZIONE DEL SUPPORTO
6	4AM	AM 371 92	2		**ENTRETOISE** ABSTANDSSTUECK SPACER SEPARADOR DISTANZIALE
7	4GX	75 527 579	2	φ 61 x 1,50	**ÉCROU DE ROULEMENT** MUTTER F. LAGER NUT F. BEARING TUERCA DEL RODAMIENTO DADO PER CUSCINETTO
8	4FF	75 498 331	1	D	**ARBRE DE DIFFÉRENTIEL** DIFFERENTIALWELLE DIFFERENTIAL SHAFT ARBOL DEL DIFERENCIAL ALBERO DIFFERENZIALE
	4FF	75 498 334	1	G	–
9	4RB	5 506 772	2	C C	**GAINE DES ARBRES** HUELLE F. WELLEN SHAFT SHEATH VAINA DE ARBOLES GUAINA PER ALBERI
10	4RB	95 532 947	2	ENS «PAM»	**GAINE COTÉ PONT** HUELLE, DIFFER.-SEITE SHEATH, DIFFER. SIDE VAINA LADO FUENTE GUAINA LATO PONTE
11	4RB	95 532 946	2	ENS «PAM»	**GAINE COTÉ ROUE** HUELLE, RADSEITE SHEATH, WHEEL SIDE VAINA LADO RUEDA GUAINA LATO RUOTA
12	4TT	ZC 9 612 644 U	2	31 x 42 x 8	**BAGUE D'ÉTANCHÉITÉ** DICHTHUELSE SEALING BUSH CASQUILLO ESTANQUEIDAD BOCCOLA DI TENUTA
13	1AM	79 03 090 190	2	25 x 52 x 15	**ROULEMENT** LAGER BEARING RODAMIENTO CUSCINETTO

TRANSMISSIONS ARRIERE (Suite)
GELENKWELLEN, HINTERE (Forts.)
DRIVESHAFTS, REAR (Cont.)
TRANSMISIONES TRAS. (Cont.)
TRASMISSIONI POST. (Cont.)

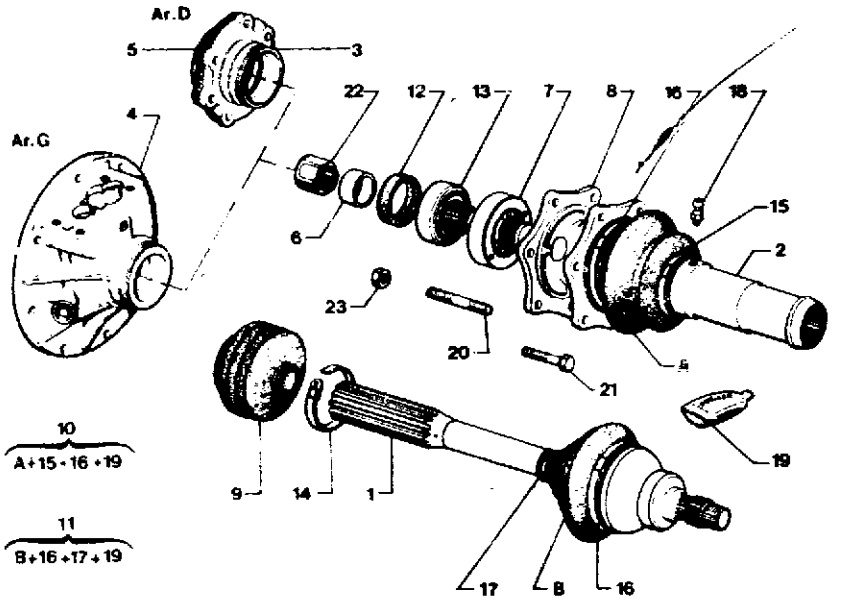

135 4-373-20

I	NUMEROS		K	4 x 4	DESIGNATIONS
14	9BF	22 862 029 RP 79 03 083 250	2	LON 360	**COLLIER** SCHELLE COLLAR COLLAR FASCETTA
15	3TT	ZC 9 614 000 U RP 79 03 083 250	2	LON 474	–
16	4TT	79 03 083 156			
17	3TT	79 03 083 153	2		–
18	4TT	95 602 714	2		**GRAISSEUR** SCHMIERNIPPEL GREASE NIPPLE ENGRASADOR INGRASSATORE
19	4GX	*75 530 215* RP 95 615 129	7	80 grs	**BERLINGOT DE GRAISSE** SCHMIERFETT GREASE GRASA GRASSA
20	4GX	5 420 020	4	φ 9 x 1,25 - 44	**GOUJON** STEHBOLZEN STUD ESPARRAGO PRIGIONIERO
21	4GX	75 527 610	8		**VIS** SCHRAUBE SCREW TORNILLO VITE
22	4CA	95 498 712	2	HE 25 x 1,50	**ECROU** MUTTER NUT TUERCA DADO
23	9DA	79 03 082 047	4	HE 9 x 1,25	–

137

4-373-30

C-13

TRANSMISSION INTERMÉDIAIRE
ZWISCHENGELENKWELLE
INTERMEDIATE DRIVESHAFT
TRANSMISION INTERMEDIA
TRASMISSIONE INTERMEDIA

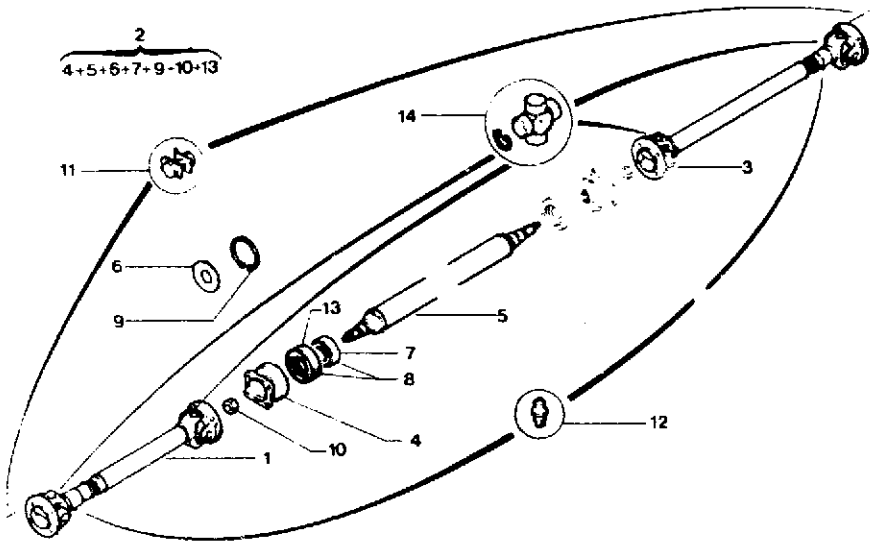

135 4-373-30

I	NUMEROS		K	4 x 4	DESIGNATIONS
1	4FF	75 498 207	1	AV - LON 465	**TRANSMISSION** GELENKWELLE DRIVESHAFT TRANSMISION TRASMISSIONE
2	4FF	*75 498 213*	1	CENT - LON 767 - NFP	—
3	4FF	75 498 215	1	AR - LON 615	—
4	4FF	95 498 599	2	ϕ 85	**BRIDE D'ACCOUPLEMENT** KUPPLUGSFLANSCH COUPLING FLANGE BRIDA DE ACOPLAMIENTO FLANGIA DI ACCOPPIAMENTO
5	4FF	95 498 602	1	CENT	**ARBRE** WELLE SHAFT ARBOL ALBERO
6	4FF	*75 498 212*	2	φ EXT 67,5 ϕ INT 31 - NFP	**RONDELLE DE RÉGLAGE** EINSTELLSCHEIBE ADJUSTING SHIM ARANDELA DE AJUSTE RONDELLA DI REGOLAZIONE
7	4AA	79 03 090 190	2	25 x 52 x 15	**ROULEMENT - FOURRURE** KUGELLAGER M. HUELLE BALL BEARING W. SHEATH RODAMIENTO - VAINA CUSCINETTO A SFERE - GUAINA
9	4FF	*75 498 209*	2	ENS - NFP	—
9	4FF	*75 498 214*	1	NFP	**CIRCLIP** SICHERUNGSRING CIRCLIP ANILLO DE RETENCION ARRESTO ELASTICO
10	1FF	75 498 280	2		**ÉCROU DE BRIDE** MUTTER F. FLANSCH FLANGE NUT TUERCA DE BRIDA DADO PER FLANGIA
11	4FF	75 498 208	16		**VIS** SCHRAUBE SCREW TORNILLO VITE
12	4TT	95 602 714	2		**GRAISSEUR** SCHMIERNIPPEL GREASE NIPPLE ENGRASADOR INGRASSATORE
13	4FF	75 498 210	2		**FOURRURE** HUELLE SHEATH VAINA GUAINI
14	4FF	95 563 152	4	ENS	**CROISILLON COMPLET** KOMPLETTES KREUZSTUECK COMPLETE CROSSHEAD CRUCETA COMPLETA CROCIERA COMPLETA

FREINS AVANT
VORDERRADBREMSEN
FRONT BRAKES
FRENOS DELANTEROS
FRENI ANTERIORI

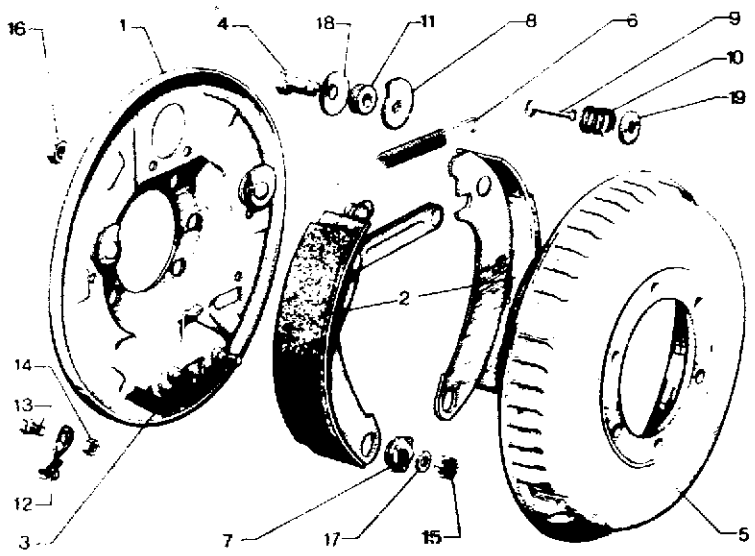

135 4-451-10

I	NUMEROS		K	▶ 7/77	DESIGNATIONS
1	4AM	AM 451 01 H	1	G	**PLATEAU** BREMSTRAGPLATTE BACKPLATE PLATO PIATTO PORTACEPPI
	4AM	AM 451 01 I	1	D	–
2	4AM	AM 451 016 A	1		**JEU DE 4 SEGMENTS** SATZ VON 4 BREMSBACKEN FOUR-SHOE SET JUEGO DE 4 SEGMENTOS SERIE DI 4 CEPPI
3	4AM	AM 451 2	4	φ 7 x 1,00 - LON 37	**AXE** LAGERBOLZEN ANCHOR PIN EJE PERNO
4	4AM	AM 451 3 A	4	TH 9 - LON 23	–
5	4AM	AM 451 6 A	2	φ INT 220,6 - φ9,75	**TAMBOUR** BREMSTROMMEL DRUM TAMBOR TAMBURO
6	4AM	AM 451 14	2	20 SPIR.	**RESSORT** FEDER SPRING MUELLE MOLLA
7	4AM	AM 451 15	4	H 7,7	**EXCENTRIQUE** EINSTELLEXZENTER ECCENTRIC EXCENTRICA ECCENTRICO
8	4AA	A 451 16	4		**CAME DE REGLAGE** EINSTELLNOCKEN ADJUSTING CAM LEVA DE REGLAJE CAMMA DI REGOLAZIONE
9	4AM	AM 451 83	4	LON 38	**TIGE** FUEHRUNGSBOLZEN ROD VARILLA ASTINA
10	4AA	A 451 85	4	φ 18	**RESSORT** FEDER SPRING MUELLE MOLLA
11	4AM	AM 451 86 A	4	E 17,4	**ENTRETOISE** ABSTANDSSTUECK SPACER SEPARADOR DISTANZIALE
12	4AA	A 454 18	1	G	**ARRET DE GAINE** FANGSTUECK F. BREMSZUG SHEATH STOP RETEN DE VAINA FERMAGUAINA
	4AA	A 454 18 A	1	D	–
13	9BF	79 03 201 020	2	TH 6 x 10	**VIS** SCHRAUBE SCREW TORNILLO VITE
14	9TT	79 03 032 070	2	HE 6 x 1,00	**ÉCROU** MUTTER NUT TUERCA DADO
15	9TT	ZD 9 249 400 U	4	HE 7 x 1,00	–
16	4TT	ZC 9 615 030 U	12	HE 9 x 1,25	–

137

4–451–10

C-11 ↓

FREINS AVANT (Suite)
VORDERRADBREMSEN (Forts.)
FRONT BRAKES (Cont.)
FRENOS DELANTEROS (Cont.)
FRENI ANTERIORI (Cont.)

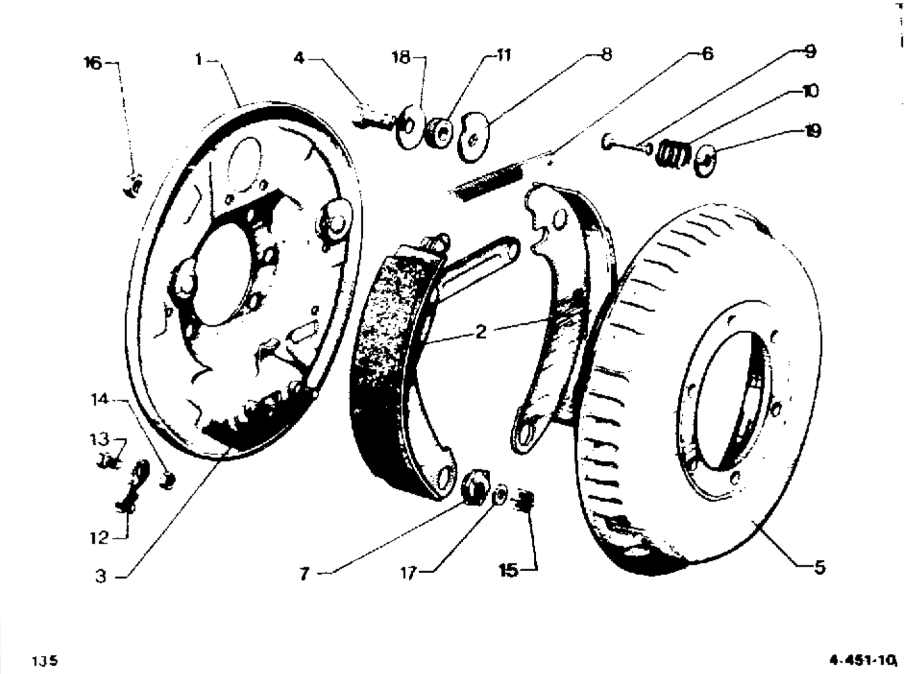

I		NUMEROS	K	▶ 7/77	DESIGNATIONS
17	9TT	79 03 063 157 **NFP**	8	⌀ 7,5 x 16	**RONDELLE** SCHEIBE WASHER ARANDELA RONDELLA
18	4TT	26 190 519	8	⌀ 9,5 x 27	–
19		ZC 9 438 157 U	4	INT 15	**CALOTTE** HALTEBLE CAP CAZOLETA CALOTTINA
	4AY	95 618 231 **NFP**	1	«ENS PAM» ▶ 1/72	**SEGMENTS + CYLINDRES** BREMSBACKEN + ZYLINDER SET + CYLINDERS SEGMENTOS+ CILINDROS CEPPI + CILINDRI
	4AY	95 618 229	1	«ENS PAM» 1/72 ▶ (USA) 7/69 ▶ 1/72	–
					PIECES SPÉCIALES SPEZIALTEILE SPECIAL PARTS PIEZAS ESPECIALES PEZZI SPECIALI
2	4AM	*AM 451 233 A*	1	SAFF - F 604 GG NFP	**JEU DE 4 SEGMENTS** SATZ VON 4 BREMSBACKEN FOUR-SHOE SET JUEGO DE 4 SEGMENTOS SERIE DI 4 CEPPI

FREINS AVANT
VORDERRADBREMSEN
FRONT BRAKES
FRENOS DELANTEROS
FRENI ANTERIORI

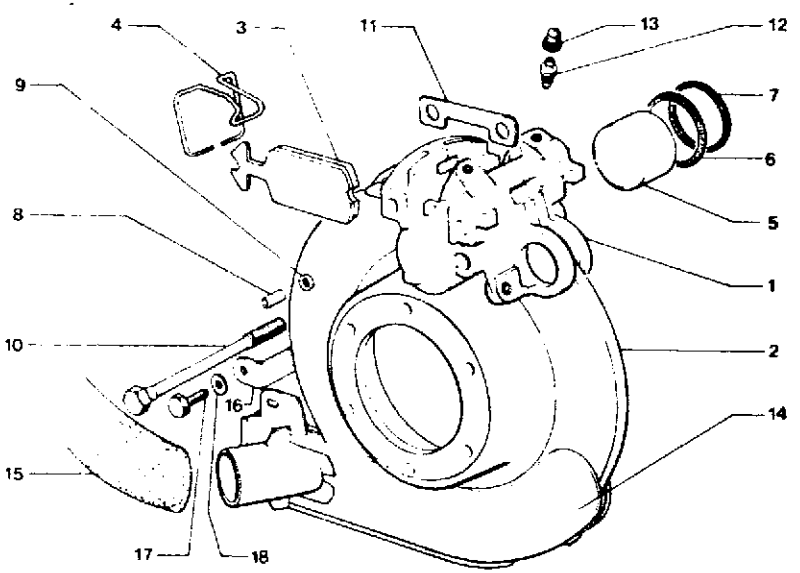

135 4-451-10A

1	NUMEROS	K	7/77 ▶	DESIGNATIONS
	ATTENTION : «MIN.» (MINÉRAL) REPERE VERT ET BLANC ACHTUNG : «MIN. (MINERALISCH) GRUENE ODER WEISSE MARKIERUNG CAUTION : MIN. (MINERAL) GREEN OR WHITE MARKING CUIDADO : MIN. (MINERAL) MARCA VERDE O BLANCA ATTENZIONE : MIN. (MINERALE) SEGNO VERDE O BIANCO			
1	4AY *75 515 980* RP 75 516 438	2	▶ 7/78	**ÉTRIER COMPLET** TRAGGEHAEUSE, KOMPLETT COMPLETE SUPPORT HOUSING PINZA COMPLETA
	4AY 95 535 826	2	7/78 ▶	PINZA COMPLETA –

2	4AM	*AM 451 23* RP 95 599 322	2	ϕ 244	**DISQUE** BREMSSCHEIBE DISC DISCO DISCO
3	4AY	75 516 219	1	«FERODO» 4 x 2	**JEU DE 4 PLAQUETTES** SATZ VON 4 BREMSSCHUHEN FOUR-PAD SET JUEGO DE 4 PLAQUETAS SERIE DI 4 PLACCHETTE
	4AY	75 516 220	1	«FRENDO» 4 x 2	–
	4FF	95 542 661	1	«FERODO» 4 x 4	–
4	4AZ	5 420 183	2		**RESSORT** FEDER SPRING MUELLE MOLLA
5	4GX	GX 25 266 01 A	4	ϕ 42 - H 27	**PISTON** DRUCKKOLBEN PISTON PISTON PISTONE
6	4AZ	5 403 207	4	42 x 47 x 2,5	**JOINT** DICHTUNG SEALING JUNTA GUARNIZIONE
7	4AZ	5 403 208	4	40,8 x 47 x 2,8	**PARE-POUSSIERE** STAUBFANG DUST EXCLUDING RING ANILLO GUARDAPOLVO ANELLO PARAPOLVERE
8	4GX	5 405 104	2		**TUBE DE POSITIONNEMENT** ZENTRIERHUELSE LOCATING BUSH TUBO DE POSICIONADO TUBETTO DI POSIZIONAMENTO
9	4VD	95 587 148	2	7,2 x 11 x 1,9	**JOINT TORIQUE** DICHTRING RING SEAL JUNTA TORICA GOMMINO
10	4AM	5 420 264	4	TH 10 x 1,50 - 139	**VIS** SCHRAUBE SCREW TORNILLO VITE
11	4AM	5 420 184	?		**CALE DE RÉGLAGE** EINSTELLSCHEIBE ADJUSTING SHIM SUPLEMENTO DE REGLAJE SPESSORE DI REGOLAZIONE
12	4AY	*75 485 818* RP 95 578 349 DEO - 79 41 401 043	2	ϕ 10 x 1,00 ▶ 7/78	**VIS DE PURGE** ENTLUEFTUNGSSCHRAUBE DRAIN SCREW TORNILLO DE PURGA VITE SPURGO
	1MA	*75 468 367* RP 95 578 352 DEO 1 - 79 41 401 043	2 2	ϕ 8 x 1,25 7/78 ▶ 4 x 4	–

137

4-451-10-A

C-09

FREINS AVANT (Suite)
VORDERRADBREMSEN (Forts.)
FRONT BRAKES (Cont.)
FRENOS DELANTEROS (Cont.)
FRENI ANTERIORI (Cont.)

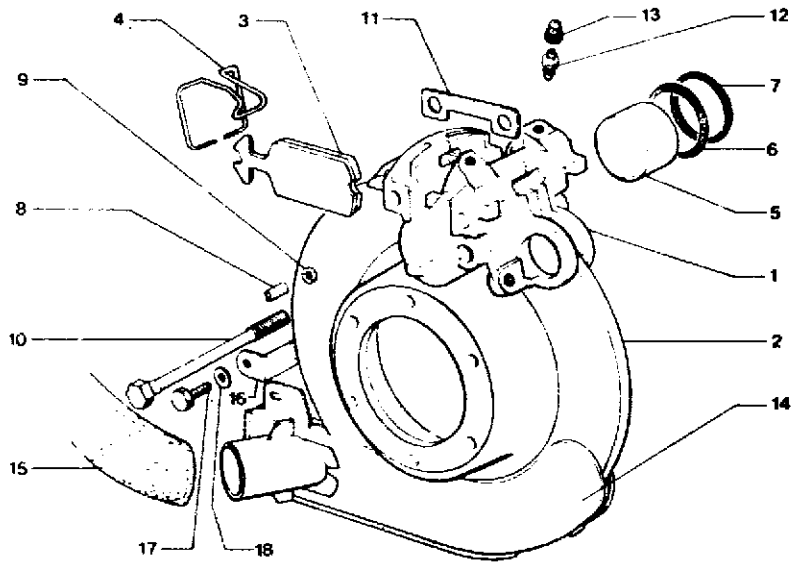

135

4 - 451 - 10A

I	NUMEROS		K	7/77 ▶	DESIGNATIONS
13	1MA	75 434 307	2		**CAPUCHON** DICHTKAPPE SEALING CAP CAPUCHON CAPPUCCIO
14	4AM	AM 452 80	1	G	**GOULOTTE** LUFTFUEHRUNG DUCT CONDUCTO CONDOTTO
	4AM	AM 452 81	1	D	–
15	4CA	95 547 230	2		ϕ INT 40 - LON 230	**CONDUIT** LEITUNG DUCT CONDUCTO CONDOTTO
16	4AM	AM 452 96	2		1 ϕ10 - 5 ϕ 0,75	**PATTE DE GOULOTTE** LASCHE F. LUFTFUEHRUNG DUCT BRACKET PATA DE CONDUCTO STAFFA PER CONDOTTO
17	9TT	79 03 201 130	2		TH 5 x14	**VIS** SCHRAUBE SCREW TORNILLO VITE
18	9AA	79 03 032 006	2		COϕ 5	**RONDELLE** SCHEIBE WASHER ARANDELA RONDELLA

137

4-451-20

C-08

FREINS ARRIERE
HINTERRADBREMSEN
REAR BRAKES
FRENOS TRASEROS
FRENI POSTERIORI

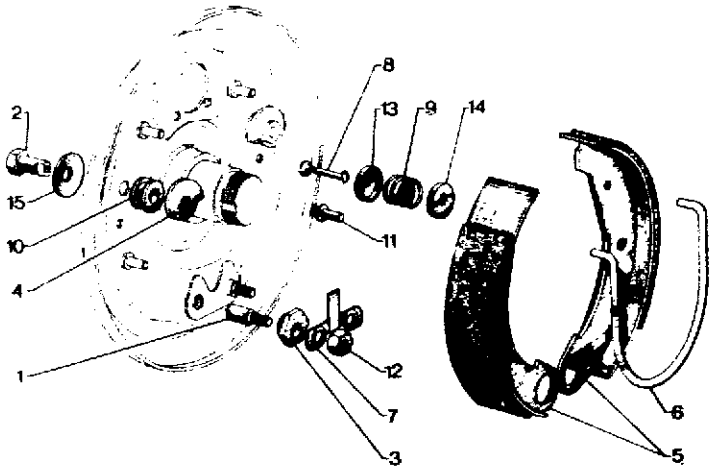

135 4-451-20

I	NUMEROS		K	4 x 2	DESIGNATIONS
1	4AA	AZ 451 202 A	4	ϕ 7 x 1,00 - LON 28	**AXE** BOLZEN PIN EJE PERNO
2	4AA	A 451 3	4	TH ϕ 9	—
3	4AA	A 451 15 C	4	H 6,7	**EXCENTRIQUE** EXZENTER ECCENTRIC EXCENTRICA ECCENTRICA
4	4AA	A 451 16	4		**CAME DE RÉGLAGE** EINSTELLNOCKEN ADJUSTING CAM LEVA DE REGLAJE CAMMA DI REGOLAZIONE
5	4AM	AM 451 018 A	1	RMP 7/77 ▶	**JEU DE 4 SEGMENTS** SATZ VON 4 BREMSBACKEN FOUR-SHOE SET JUEGO DE 4 SEGMENTOS SERIE DI 4 CEPPI
6	4AM	AM 451 21 A	2	ϕ 5,5	**RESSORT** FEDER SPRING MUELLE MOLLA
7	4AM	AZ 451 65	2	2 ϕ 8	**ARRETOIR** SICHERUNGSBLECH LOCKPLATE RETEN ARRESTO
8	4AA	A 451 83	4	LON 35	**TIGE** FUEHRUNGSBOLZEN ROD VARILLA ASTINA
9	4AA	A 451 85	4	ϕ 18	**RESSORT** FEDER SPRING MUELLE MOLLA
10	4AA	A 451 86	4	ϕ 9 - H 10	**ENTRETOISE** ABSTANDSSTUECK SPACER SEPARADOR DISTANZIALE
11	4AA	A 451 87	8	LON 24	**COLONNETTE** STUETZBOLZEN STUD ESPARRAGO COLONNETTA
12	9TT	79 03 032 036	4	HE 7 x 1,00	**ÉCROU** MUTTER NUT TUERCA DADO
13	4TT	*ZC 9 438 155 U* RP ZC 9 438 157 U	4	ϕ INT 19	**CUVETTE** TELLER CUP CUBETA SCODELLINO
14	4TT	ZC 9 438 157 U	4	ϕ INT 19	**CALOTTE** HALTEBLECH CAP CAZOLETTA CALOTTINA
15	4TT	26 190 519	8	ϕ 9,5 x 27	**RONDELLE** SCHEIBE WASHER ARANDELA RONDELLA

FREINS ARRIERE (Suite)
HINTERRADBREMSEN (Forts.)
REAR BRAKES (Cont.)
FRENOS TRASEROS (Cont.)
FRENI POSTERIORI (Cont.)

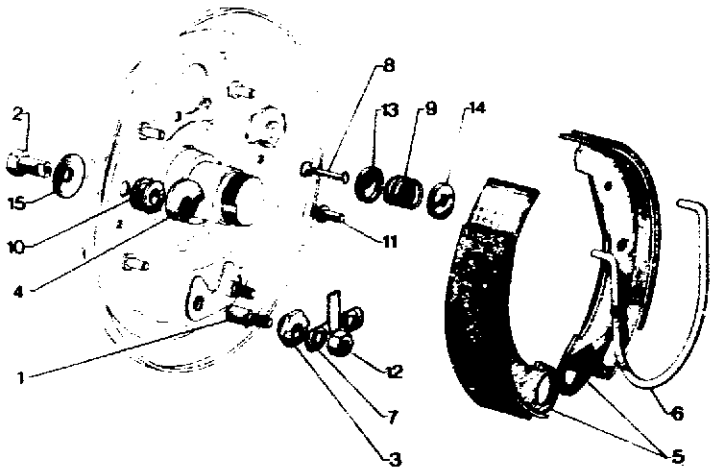

135 4.451.20

I	NUMEROS		K	4 x 2	DESIGNATIONS
	4AA	95 618 234 NFP	1	«ENS PAM» ▶1/72	**SEGMENTS + CYLINDRES** BREMSBACKEN + ZYLINDER SET + CYLINDERS SEGMENTOS + CILINDROS CEPPI + CILINDRI
	4AA	95 618 237	1	«ENS PAM» 7/78 ▶	–
	4AA	95 618 235	1	«ENS PAM» 1/72 ▶7/77	–

5	4AM	*AM 451 234 A*	1	(USA) 7/69 ▶ 1/72 SAFF - F 604 GG NFP	**PIECES SPECIALES** SPEZIALTEILE SPECIAL PARTS PIEZAS ESPECIALES PEZZI SPECIALI **JEU DE 4 SEGMENTS** SATZ VON 4 BREMSBACKEN FOUR-SHOE SET JUEGO DE 4 SEGMENTOS SERIE DI 4 CEPPI

137

4-451-30

C-06

FREINS ARRIERE
HINTERRADBREMSEN
REAR BRAKES
FRENOS TRASEROS
FRENI POSTERIORI

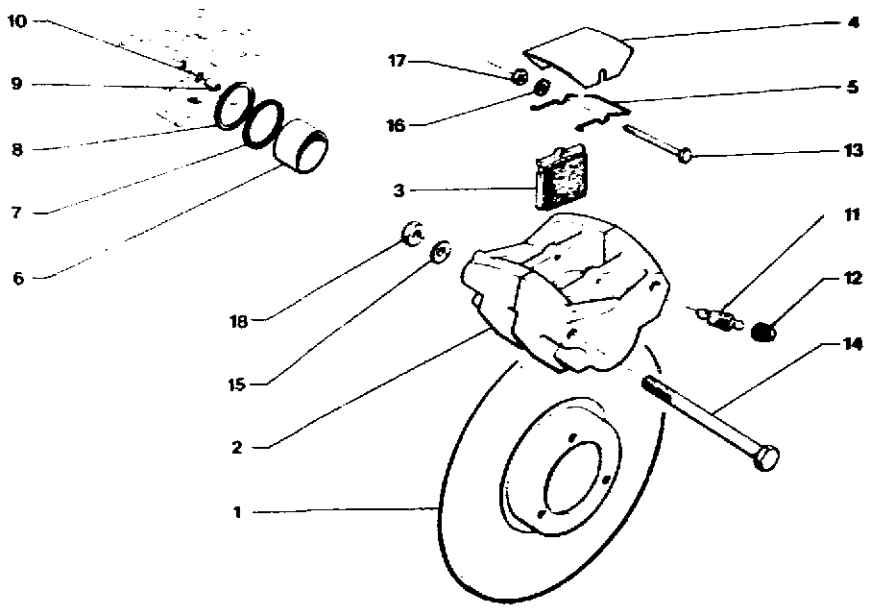

I	NUMEROS		K	4 x 4	DESIGNATIONS
1	4FF	75 498 348	2		**DISQUE** BREMSSCHEIBE DISC DISCO DISCO
2	4GX	GX 25 128 01 B **NFP**	2		**ÉTRIER COMPLET** TRAGGEHAEUSE, KOMPLETT COMPLETE SUPPORT HOUSING PINZA COMPLETA PINZA COMPLETA
3	4FF	95 542 662	1		**JEU DE 4 PLAQUETTES AVEC FIL D'USURE** SATZ VON 4 BREMSSCHUHEN MIT KABELN SET OF 4 BRAKE PLATES WITH LEADS JUEGO DE 4 PLAQUETAS CON HILOS SERIE DI 4 PATTINI CON CAVETTI
4	4FF	95 498 492	1		**TOLE** BLECH PANEL CHAPA LAMIERA
5	4GX	GX 25 331 01 B **NFP**	2		**RESSORT** FEDER SPRING MUELLE MOLLA
6	4GX	GX 25 104 01 A **NFP**	4	φ 30 - H 28	**PISTON** DRUCKKOLBEN PISTON PISTON PISTONE
7	4GX	GX 25 103 01 A **NFP**	4	29,5 x35,7 x 2,8	**JOINT PARE-POUSSIERE** DICHTUNG DUST-COVER JUNTA GUARDAPOLVO GUARNIZIONE PARAPOLVERE
8	4GX	GX 25 102 01 A **NFP**	4	30 x 35 x 2,5	**JOINT D'ÉTANCHÉITÉ** DICHTUNG SEAL JUNTA GUARNIZIONE
9	4GX	5 405 104	2	LON 14	**TUBE** ROHR PIPE TUBO TUBO
10	4VD	95 587 148	2	7,2 x 11 x 1,9	**JOINT TORIQUE** DICHTRING RING SEAL JUNTA TORICA GOMMINO
11	4GX	*5 405 106* RP 95 578 346 DEO - 79 41 401 043	2		**VIS DE PURGE** ENTLUEFTUNGSSCHRAUBE DRAIN SCREW TORNILLO DE PURGA VITE SPURGO
12	4TT	79 41 401 043	2		**CAPUCHON** DICHTKAPPE SEALING CAP CAPUCHON CAPPUCCIO
13	4GX	GX 25 335 01 A	2	TH 5 x 72	**VIS** SCHRAUBE SCREW TORNILLO VITE
14	4GX	GX 25 107 01 B	4	TH 9 x 1,25 - 127	—

FREINS ARRIERE (Suite)
HINTERRADBREMSEN (Forts.)
REAR BRAKES (Cont.)
FRENOS TRASEROS (Cont.)
FRENI POSTERIORI (Cont.)

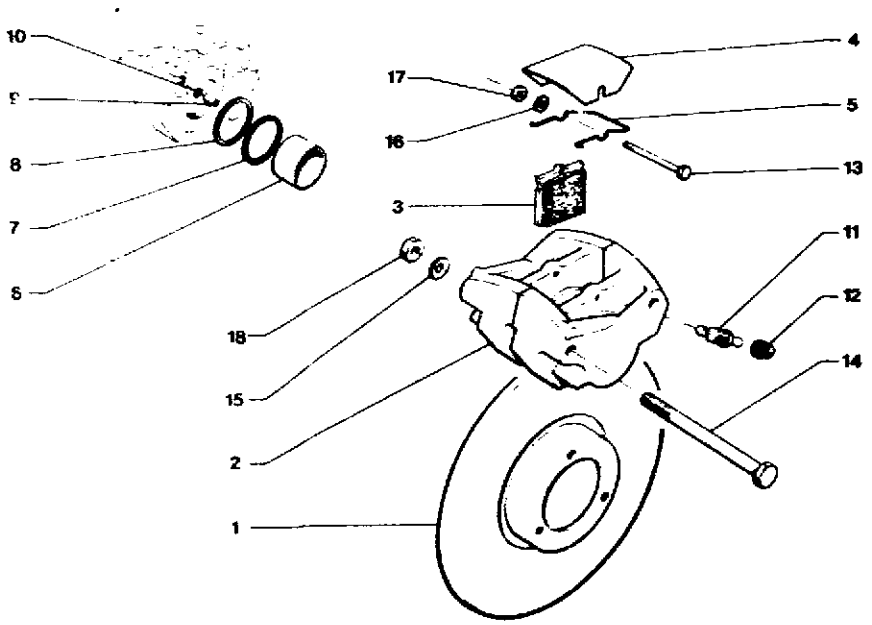

I	NUMEROS		K	4 x 4	DESIGNATIONS
15	4GX	79 03 058 087	4	9 x 20 x 1,6	**RONDELLE A PICOTS** SCHEIBE MIT ZAECKCHEN WASHER WITH POINTS ARANDELA CON PUNTAS RONDELLA A PUNTE
16	9AA	79 03 058 027	4	5 x 12 x 1,2	–
17	9TT	79 03 032 006	2	HE 5 x 0,80	**ÉCROU** MUTTER NUT TUERCA DADO
18	9DA	79 03 032 247	4	HE 9 x 1,25	–

137

4-453-10

C-04

CANALISATIONS DE FREINS
BREMSLEITUNGEN
BRAKE PIPING
TUBOS PARA FRENOS
CANALIZZAZIONI PER FRENI

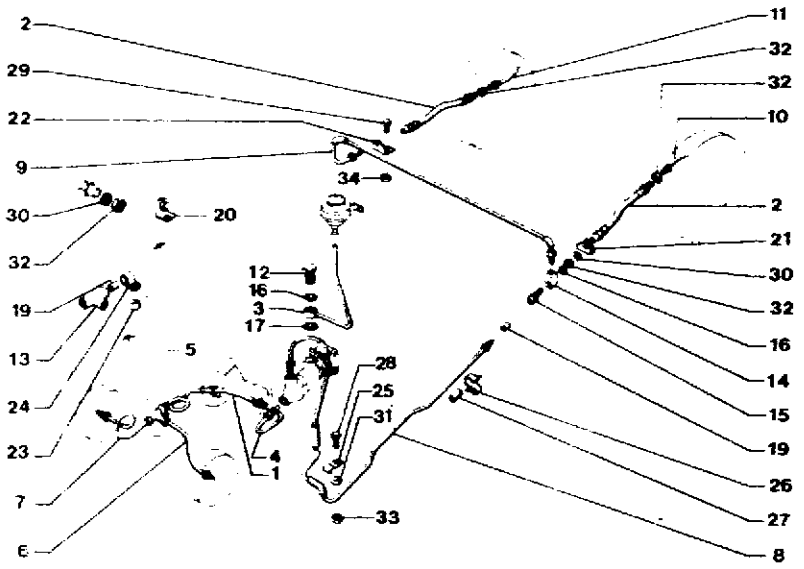

135

4-453-10

I	NUMEROS		K	▶ 1/72	DESIGNATIONS
1	4AA	*AZ 453 29 B*	1	AV - LON 307 ▶ 5/69 NFP	**FLEXIBLE** SCHLAUCH HOSE TUBO FLEXIBLE TUBO FLESSIBILE
	4AY	*AY 453 29 A*	1	AV - NFP 5/69 ▶	—
2	4AM	AM 453 35	2	AR - LON 304	—
3	4AM	AM 453 195 NFP	1	ϕ 4,5 6/69 ▶	**TUBE** ROHR PIPE TUBO TUBO
4	4AY	*AY 453 53*	1	NFP ▶ 5/69	—
	4AY	*AYB 453 351 A*	1	NFP 5/69 ▶	—
5	4AY	*AY 453 60 A*	1	NFP	—
6	4AK	AK 453 30 A	1	AV G - NFP	—
7	4AK	AK 453 31 A	1	AV D - NFP	—
8	4AY	AY 453 32 B	1		—
9	4AM	AM 453 33 A	1	LON 936	—
10	4AY	AY 453 34 A	1	AR G	—
11	4AY	AY 453 34	1	AR D	—
12	4AM	*75 413 192*	1	ϕ 16 x 1,50 6/69 ▶ NFP	**VIS RACCORD** VERBINDUNGSSCHRAUBE UNION SCREW TORNILLO RACOR VITE RACCORDO
13	4AY	5 416 494	1		**RACCORD 3 VOIES** DREIWEGEVERBINDUNG THREE-WAY UNION RACOR DE 3 BOCAS RACCORDO A 3 VIE
14	4AM	5 427 920	1		**RACCORD** VERBINDUNGSSTUECK UNION RACOR RACCORDO
15	4AM	5 430 723	1		—
16	4TT	26 178 189	1	19,5 x 24 x 0,8- 6/69 ▶	**JOINT** DICHTUNG SEAL JUNTA GUARNIZIONE
17	9TT	22 478 009	1	16,3 x 22 x 1,6- 6/69 ▶	—
18	9AM	22 417 009	2	CU - 9,2 x 14 x 1,1	—
19	9DA	21 590 009	?	5 x 7,2 x 9,5 6/70 ▶ RMP	**GARNITURE** ABDICHTHUELSE SEALING SLEEVE GUARNICION GUARNIZIONE
20	4AY	*AY 453 80 B*	1	NFP	**SUPPORT** HALTELASCHE LUG SOPORTE SUPPORTO
21	4AM	AM 453 67 - NFP	1	G	—
22	4AM	*AM 453 67 A*	1	D - NFP	—
23	4AA	*5 438 341*	2	7,5 x 14 x 11 - NFP	**ENTRETOISE** ABSTANDSSTUECK SPACER SEPARADOR DISTANZIALE
24	4AY	AY 453 175	1		**PATTE** SCHELLE CLIP COLLAR STAFFA
25	9AM	22 525 009	1		—
26	6DA	26 197 999	2	LAR 14	**AGRAFE** KLAMMER CLIP GRAPA GRAFFETTA
	4AA	26 198 259	3	LAR 12	—

CANALISATIONS DE FREINS (Suite)
BREMSLEITUNGEN (Forts.)
BRAKE PIPING (Cont.)
TUBOS PARA FRENOS (Cont.)
CANALIZZAZIONI PER FRENI (Cont.)

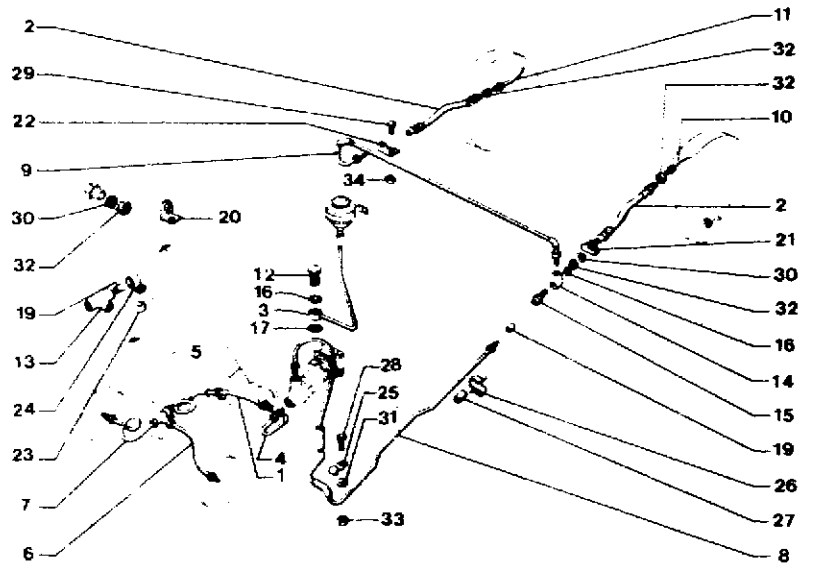

135 4-453-10

I	NUMEROS		K	▶ 1/72	DESIGNATIONS
27	3DA	5 411 956	1	4 x 9 x 15	**GAINE** HUELSE BUSH VAINA BOCCOLA
28	9GX	79 03 201 012	1	TH 5 x 14	**VIS** SCHRAUBE SCREW TORNILLO VITE
29	9SM	79 03 101 769	2	TH 7 x 16	—
30	4AA	5 411 619	4	14,5 x 20 x 2	**RONDELLE** SCHEIBE WASHER ARANDELA RONDELLA
31	9TT	79 03 053 025	1	ϕ 5,5 x 9	—
32	4TT	79 03 032 231	5	HE 14 x 1,50	**ÉCROU** MUTTER NUT TUERCA DADO
33	9TT	*25 259 019* RP 79 03 032 006	1	HE 5 x 0,80	—
34	9TT	*25 241 009*	4	HE 7 x 1,00 - NFP (USA) 7/69▶1/72	**PIECES SPÉCIALES** SPEZIALTEILE SPECIAL PARTS PIEZAS ESPECIALES PEZZI SPECIALI
	4AY	75 531 949 RP 5 421 919	1	AR G	**TUBE** ROHR PIPE TUBO TUBO
	4AY	75 531 950 RP 5 421 922	1	AR D	—
	4AM	AM 453 33 D	1		**TUBE ENTRE RACCORD AR. ET TRAVERSE** ROHR ZWISCHEN HINTERER VERBINDUNG UND TRAVERSE PIPE BETWEEN REAR UNION AND CROSSMEMBER TUBO ENTRE RACOR TRAS. Y TRAVIESA TUBO FRA RACCORDO POST. E TRAVERSA
	4AM	*AM 453 37*	1	NFP	**RACCORD AVEC PATTE** VERBINDUNG MIT LASCHE UNION WITH LUG RACOR CON PATA RACCORDO CON STAFFA
	4AM	AM 453 134	1	AR	**RACCORD 3 VOIES** DREIWEGEVERBINDUNG THREE-WAY UNION RACOR DE 3 BOCAS RACCORDO A 3 VIE
	5AZ	5 413 895	2		**BAGUE DE PROTECTION** SCHUTZHUELSE PROTECTION BUSH ANILLO DE PROTECCION BOCCOLA DI PROTEZIONE
	9AA	21 589 009	?	CC - 4 x 6,2 x 9,5	**GARNITURE DE RACCORD** DICHTGARNITUR F. VERBINDUNG RUBBER SEALING F. UNION GUARNICION DE RACOR GUARNIZIONE PER RACCORDO

137

4-453-10-A

C-02

CANALISATIONS DE FREINS
BREMSLEITUNGEN
BRAKE PIPINGS
TUBOS PARA FRENOS
CANALIZZAZIONI PER FRENI

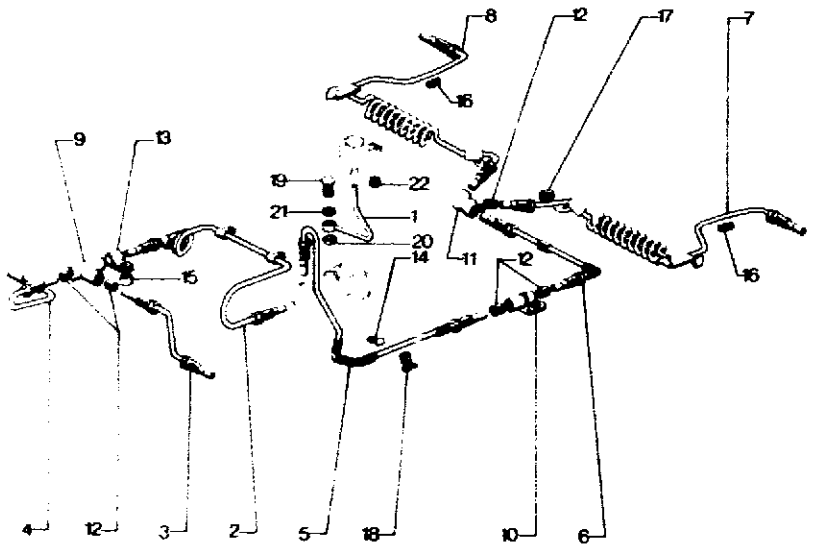

135

4.453.10A

I	NUMEROS	K	1/72 ▶ 7/76	DESIGNATIONS

NOTA I = 5 - 6 - 10 EN P.R. CORRESPOND A UN TUBE UNIQUE EN SERIE
ANM. I = 5 - 6 - 10 ERSETZEN DAS EINTEILIGE, SERIENMAESSIGE ROHR
NOTE I = 5 - 6 - 10 SUPERSED THE ONE-PART STANDARD PIPE
NOTA I = 5 - 6 - 10 REEMPLAZAN EL TUBO DE SERIE EN UNA PARTE
NOTA I = 5 - 6 - 10 SOSTITUISCONO IL TUBO DI SERIE IN UNA PARTE

1	4CA	5 441 590	1	Ø 3,5 - RMP	7/73 ▶	**TUBE** ROHR PIPE TUBO TUBO
2	4AY	AYB 453 333 A	1	NFP	▷ 7/73	–
	4CA	5 440 199	1		7/73 ▶	–
3	4AY	AY 453 332 A	1	NFP		–
4	4AY	AY 453 333 A	1			–
5	4AY	AY 453 342 A	1		▶ 7/73	
	4AA	5 444 063	1		7/73 ▶	–
6	4AM	AM 453 33 D	1			
7	4AY	75 531 949	1			–
		RP 5 421 919				
8	4AY	75 531 950	1			–
		RP 5 421 922				
9	4GX	5 438 353	1			**RACCORD** VERBINDUNG UNION RACOR RACCORDO
10	4AM	AM 453 338 A	1			–
		RP 96 995 250				
11	4AM	AM 453 134	1			–
12	9AA	21 589 009	2	4 x 62 x 9,5		**GARNITURE D'ETANCHEITE** ABDICHTHUELSE SEALING BUSH ANILLO DE ESTANQUEIDAD BOCCOLA DI TENUTA
13	4AY	AY 453 175	1			**PATTE DE MAINTIEN** HALTELASCHE CLAMP PATA STAFFA
14	9AM	22 525 009	1		▶ 4/74	–
	4TT	26 199 449	1		4/74 ▶	–
15	4AA	5 438 341	2	7,5 x 14 x 11 - NFP		**ENTRETOISE** ABSTANDSSTUECK SPACER SEPARADOR DISTANZIALE
16	4AM	5 420 939	6	3 x 8 x 15 - NFP		**BAGUE DE PROTECTION** SCHUTZHUELSE PROTECTION BUSH ANILLO DE PROTECCION BOCCOLA DI PROTEZIONE
17	5AZ	5 413 895	2	9 x 21 x 30		–
18	6AM	AM 174 221 A	6	«PLASTIQUE» Ø 3,5 - 6		**AGRAFE** KLAMMER CLIP GRAPA GRAFFETTA
19	4AM	5 413 192	1	Ø 16 x 1,50 - NFP		**VIS RACCORD** VERBINDUNGSSCHRAUBE UNION SCREW TORNILLO-RACOR VITE-RACCORDO
20	9TT	22 478 009	1	16,3 x 22 x 1		**JOINT** DICHTUNG SEAL JUNTA GUARNIZIONE
21	4TT	26 178 189	1	9,5 x 24 x 0,8		–
22	6AM	26 140 389	1	Ø 25 - 35 - «HOP» - NFP		**COLLIER** SCHELLE COLLAR COLLAR COLLARE

CANALISATIONS DE FREINS (Suite)
BREMSLEITUNGEN (Forts.)
BRAKE PIPINGS (Cont.)
TUBO PARA FRENOS (Cont.)
CANALIZZAZIONI PER FRENI (Cont.)

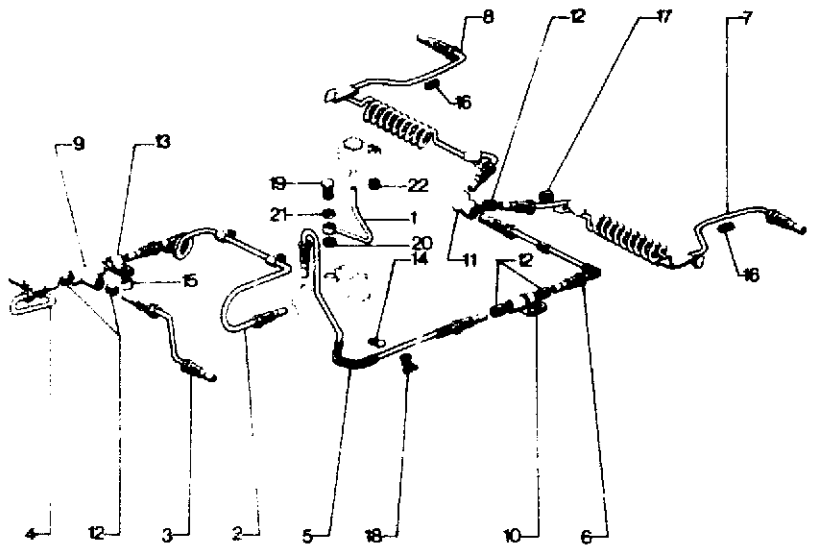

135 4.453.10A

I	NUMEROS		K	1/72 ▶ 7/76	DESIGNATIONS
					PIECES SPÉCIALES SPEZIALTEILE SPECIAL PARTS PIEZAS ESPECIALES PEZZI SPECIALI
				(CH) 11/72 ▶6/73	
1	4CA	*5 421 937*	1	AV ϕ 6,35 - LON 234 NFP	**TUBE** ROHR PIPE TUBO TUBO
	4CA	*5 421 938*	1	AR ϕ 6,35 - LON 234 NFP	–
2	4CA	*5 421 935*	1	ϕ 3,5 - NFP	–

I	NUMEROS		K	1/72 ▶ 7/76	DESIGNATIONS
				(B) 10/75 ▶ (CH) 6/73 ▶ (NL) 10/75 ▶	
1	4CA	*5 447 528*	1	AV - NFP	**TUBE** ROHR PIPE TUBO TUBO
	4CA	*5 447 529*	1	AR - NFP	–
2	4CA	*5 447 530*	1	NFP	–
5	4AA	5 448 513 - NFP	1		–
	4AA	5 472 299	1	(NL) (B) (NL) 7/72 ▶ 10/75	–
5	4AA	*5 430 939*	1	NFP ▶ 7/73	**TUBE** ROHR PIPE TUBO TUBO
	4AA	*5 444 066*	1	NFP 7/73 ▶	–
14	9AM	22 525 009	1	(NL) 5/75 ▶	**PATTE DE MAINTIEN** HALTELASCHE CLAMP PATA STAFFA

137

4-453-10-B

D-01

CANALISATIONS DE FREINS
BREMSLEITUNGEN
BRAKE PIPING
TUBOS PARA FRENOS
CANALIZZAZIONI PER FRENI

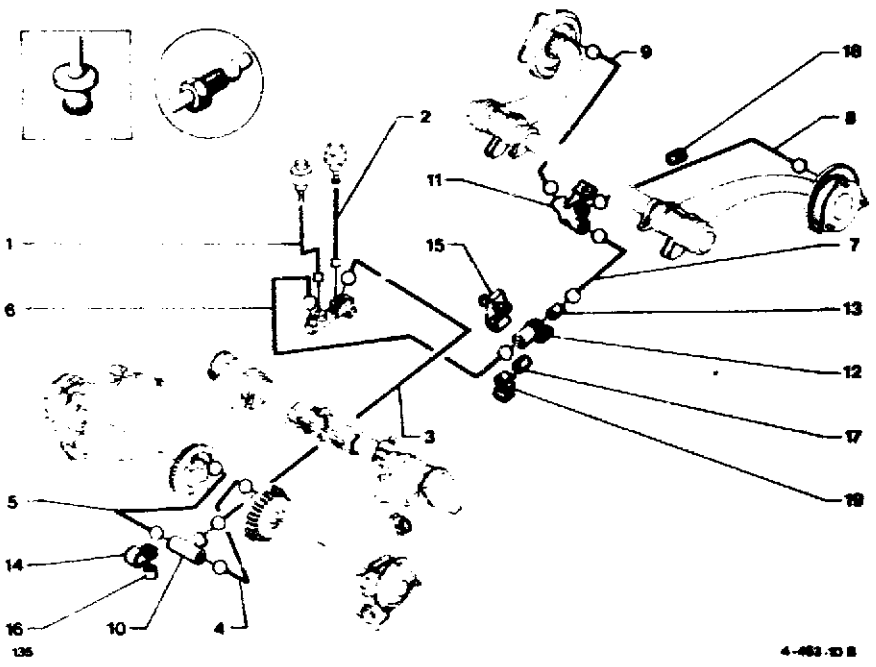

I		NUMEROS	K	7/76 ▶ 7/77	DESIGNATIONS
1	4CA	5 485 667	1	AV - ⌀6,35 - LON 234	**TUBE** ROHR PIPE TUBO
2	4CA	5 485 668	1	AR - ⌀6,35 - LON 234	–
3	4CA	*5 447 530*	1	⌀ 3,5 - NFP	–
4	4AY	95 641 001	1		–
5	4AY	AY 453 333 A	1		–
6	4AA	5 448 513	1	NFP	–
7	4AM	AM 453 33 D	1		–
8	4AY	75 531 949 RP 5 421 919	1		
9	4AY	75 531 950 RP 5 421 922	1		
10	4GX	5 438 353	1	AV	**RACCORD 3 VOIES** VERBINDUNG ZU 3 WIEGE UNION WITH 3 WAYS RACOR DE 3 BOCAS RACCORDO A 3 VIE
11	4AM	AM 453 134	1	AR	–
12	4AM	AM 453 338 A NFP	1		– **2 VOIES** ZU 2 WEGE WITH 2 WAYS 2 BOCAS A 2 VIE
13	8AA	21 589 009	?	4 x 6,2 x 9,5	**GARNITURE D'ÉTANCHÉITÉ** ABDICHTHUELSE SEALING BUSH ANILLO DE ESTANQUEIDAD BOCCOLA DI TENUTA
14	4AY	AY 453 175	1		**PATTE DE MAINTIEN** HALTESCHELLE COLLAR PATA STAFFA
15	4TT	26 199 449	1		**SUPPORT TUBE** TRAEGER F. ROHR PIPE BRACKET SOPORTE DE TUBO SUPPORTO PER TUBO
16	4AA	*5 438 341*	2	7,5 x 14 x 11 - NFP	**ENTRETOISE** ABSTANDSSTUECK SPACER SEPARADOR DISTANZIALE
17	4AM	5 411 956	6	3 x 9 x 15	**BAGUE DE PROTECTION** SCHUTZHUELSE PROTECTION BUSH ANILLO DE PROTECCION BOCCOLA DI PROTEZIONE
18	5AZ	5 413 895	2	9 x 21 x 30	–
19	6AM	AM 174 221 A	6	«PLASTIQUE» ⌀ 3,5 - 6	**AGRAFE** KLAMMER CLIP GRAPA GRAFFETTA
				(A) (DK)	**PIECES SPÉCIALES** SPEZIALTEILE SPECIAL PARTS PIEZAS ESPECIALES PEZZI SPECIALI
1	4CA	5 441 590	1		**TUBE** ROHR PIPE TUBO TUBO
3	4CA	5 440 199	1		–
6	4AA	5 444 063	1		–

CANALISATIONS DE FREINS (Suite)
BREMSLEITUNGEN (Forts.)
BRAKE PIPING (Cont.)
TUBOS PARA FRENOS (Cont.)
CANALIZZAZIONI PER FRENI (Cont.)

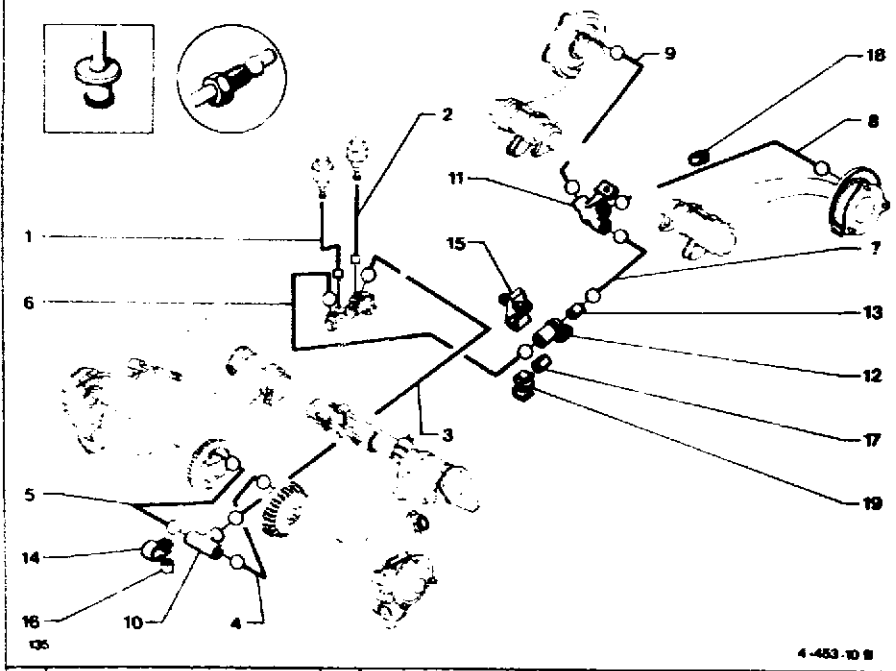

I	NUMEROS		K	7/76 ▶ 7/77	DESIGNATIONS
				(A) (DK)	**PIECES SPÉCIALES (Suite)** SPEZIALTEILE (Forts.) SPECIAL PARTS (Cont.) PIEZAS ESPECIALES (Cont.) PEZZI SPECIALI (Cont.)
	4AM	5 413 192 **NFP**	1	ϕ 16 x 1,50	**VIS RACCORD** VERBINDUNGSSCHRAUBE UNION SCREW TORNILLO RACOR VITE-RACCORDO
	9TT	22 478 009	1	16,3 x 22 x 1	**JOINT** DICHTUNG SEAL JUNTA GUARNIZIONE
	4TT	26 178 189	1	9,5 x 24 x 0,8	–
	6TT	ZC 9 857 138 U **NFP**	1	ϕ 25 - 35	**COLLIER** SCHELLE COLLAR COLLAR COLLARE

CANALISATIONS DE FREINS
BREMSLEITUNGEN
BRAKE PIPINGS
TUBOS PARA FRENOS
CANALIZZAZIONI PER FRENI

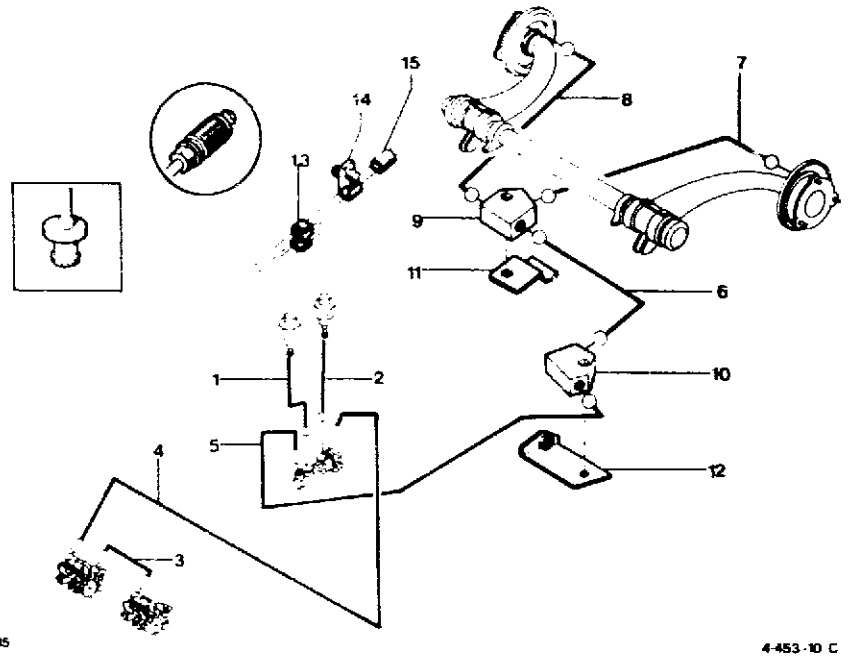

4-453-10 C

	NUMEROS	K	7/77 ▶ 7/78	DESIGNATIONS
NOTA	1 = 5 - 6	10 EN P.R. CORRESPOND A UN TUBE UNIQUE EN SERIE		
ACHTUNG	1 - 5 - 6	10 ERSETZEN DAS EINTEILIGE, SERIENMAESSIGE ROHR		
NOTE	1 - 5 - 6	10 SUPERSEDE, THE ONE PART STANDARD PIPE		
NOTA	1 - 5 - 6	10 REEMPLAZAN EL TUBO DE SERIE EN UNA PARTE		
NOTA	1 - 5 - 6	10 SOSTITUISCONO IL TUBO DI SERIE IN UNA PARTE		
1	4CA 5 485 667	1	AV Ø 6,35 ▶ 6/78	**TUBE** ROHR PIPE TUBO TUBO
2	4CA 5 485 668	1	AR - Ø 6,35 ▶ 6/78 NFP	–

3	4AY	75 529 700 DEO 2 - 75 529 706 2 21 888 009	1	Ø 3,5	**TUBE** ROHR PIPE TUBO TUBO
4	4AY	75 529 698 DEO 2 - 75 529 706 2 - 21 888 009	1		–
	4AY	75 529 698 DEO 2 - 75 529 698 2 - 21 888 009	1		–
5	4AY	75 511 990	1		–
6	4AY	75 511 993	1	NFP	–
7	4AY	75 511 663 RP 5 421 919	1		–
8	4AY	75 511 664 RP 5 421 922 DEO 75 529 706 96 085 785	1		–
9	4AY	75 510 789	1		**RACCORD (3 VOIES)** VERBINDUNG UNION RACOR RACCORDO
10	4AY	75 512 021	1		**- (2 VOIES)**
11	4AY	75 512 020	1	NFP	**PATTE** LASCHE LUG PATA STAFFA
12	4AY	75 511 995	1	NFP	–
13	6AM	AM 174 221 A	6	«PLASTIQUE»	**AGRAFE** KLAMMER CLIP GRAPA GRAFFETTA
14	9TT	26 199 449	1		–
15	4AY	AM 511 268 A	1	LON 25 NFP	**GAINE/BV** HUELLE AM GETRIEBE SHEATH VON GEARBOX VAINA SOBRE C.V. GUAINA SULLA S.C.
				(NL) (B)	**PIECES SPECIALES** SPEZIALTEILE SPECIAL PARTS PIEZAS ESPECIALE PEZZI SPECIALI
5	4CD	75 512 077	1	NFP	**TUBE** ROHR PIPE TUBO TUBO

137

4-453-10-0

D-04 ↑

CANALISATIONS DE FREINS
BREMSLEITUNGEN
BRAKE PIPINGS
TUBOS PARA FRENOS
CANALIZZAZIONI PER FRENI

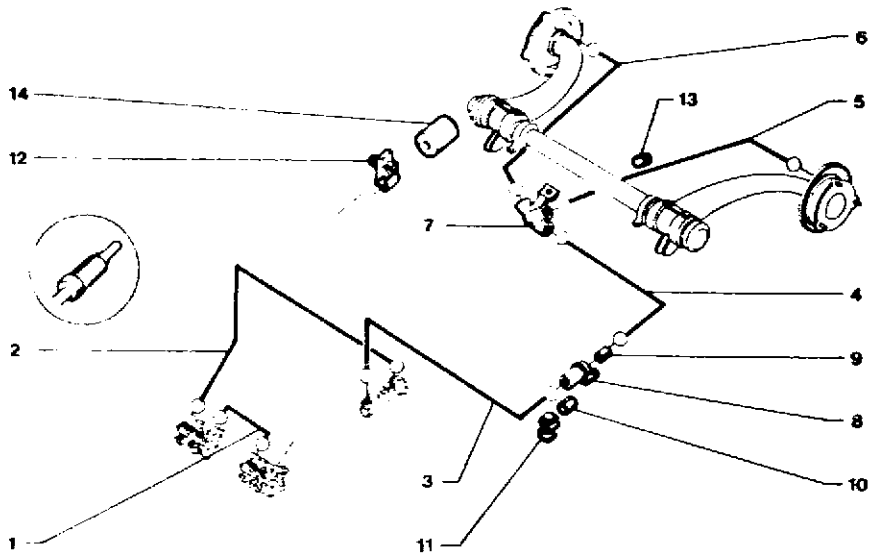

135

4-453-10 D

I	NUMEROS	K	4 x 2 7/78 ▶	DESIGNATIONS
	NOTA : I = 3 - 4 - 8 EN PR CORRESPOND A UN TUBE UNIQUE EN SÉRIE ANM. : I = 3 - 4 - 8 ERSETZEN DAS EINTEILIGE SERIENMAESSIGE ROHR NOTE : I = 3 - 4 - 8 SUPERSEDE THE ONE PART STANDARD PIPE NOTA : I = 3 - 4 - 8 REEMPLAZAN EL TUBO DE SERIE EN UNA PARTE NOTA : I = 3 - 4 - 8 SOSTITUISCONO IL TUBO DI SERIE IN UNA PARTE			
1	4CA 75 529 700	1	φ 3,5	**TUBE** ROHR PIPE TUBO TUBO
2	4CA 75 529 698	1		–
3	4AY AY 453 342 A	1	φ 3,5	**TUBE** ROHR PIPE TUBO TUBO
4	4AM AM 453 33 0	1		–
5	4AY 75 531 949 RP 5 421 919	1		–
6	4AY 75 531 950 RP 5 421 922	1		–
7	4AM AM 453 134	1		**RACCORD (3 VOIES)** VERBINDUNG UNION RACOR RACCORDO
8	4AM AM 453 338 A	1	NFP	**– (2 VOIES)**
9	3AM 21 589 009	?		**GARNITURES** DICHTGARNITUR SEAL JUNTA GUARNIZIONE
10	4AM *5 420 939* RP 5 411 956	8		–
11	6AM AM 174 221 A	6		**AGRAFE (PLASTIQUE)** KLAMMER (AUS PLASTIK) CLIP (PLASTIC) GRAPA (PLASTICO) GRAFFETTA (PLASTICA)
12	4TT 28 199 449	1		**SUPPORT TUBE** ROHRHALTERUNG PIPE BRACKET SOPORTE PARA TUBO SUPPORTO PER TUBO
13	4AA 5 413 895	2		**BAGUE PROTECTION** SCHUTZHUELSE PROTECTION BUSH CASQUILLO PROTECCION BOCCOLA PROTEZIONE
14	4AY *AM 511 268 A*	1	LON 25 NFP	**GAINE BV** HUELLE AM GETRIEBE SHEATH ON GEARBOX VAINA SOBRE C.V. GUAINA SULLA S.C.
			(NL) (B)	**PIECES SPÉCIALES** SPEZIALTEILE SPECIAL PARTS PIEZAS ESPECIALES PEZZI SPECIALI
3	4AA 5 472 299	1		**TUBE** ROHR PIPE TUBO TUBO

137

4–453–11

D–05

CANALISATIONS DE FREINS
BREMSLEITUNGEN
BRAKE PIPINGS
TUBOS PARA FRENOS
CANALIZZAZIONI PER FRENI

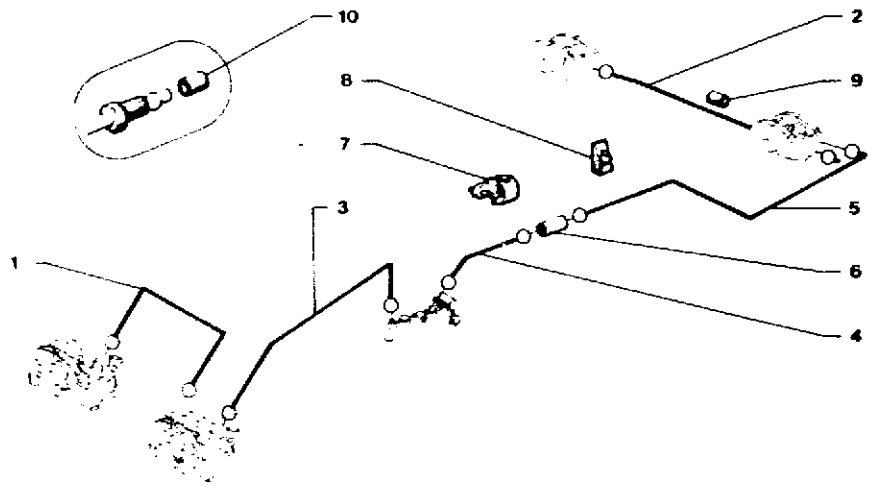

I	NUMEROS		K	4 x 4 ▶12/79	DESIGNATIONS
1	4AA	75 529 700	1	ϕ 3,5	**TUBE** ROHR PIPE TUBO TUBO
2	4FF	*75 498 417*	1	NFP	–
3	4FF	75 498 409	1		–
4	4FF	75 498 413 - NFP	1		–
5	4FF	75 498 415 - NFP	1		–
6	3MA	5 447 199	1		**RACCORD** VERBINDUNG UNION RACOR RACCORDO
7	3MA	26 199 569	1		**SUPPORT DE RACCORD** VERBINDUNGSTRAEGER UNION BRACKET SOPORTE DEL RACOR SUPPORTO RACCORDO
8	4TT	26 199 449	1		**SUPPORT TUBE** ROHRHALTERUNG PIPE BRACKET SOPORTE PARA TUBO SUPPORTO PER TUBO
9	3MA	5 411 956	1		**GAINE** HUELLE SHEATH VAINA GUAINA
10	9AM	21 888 009	?		**GARNITURE** DICHTUNG SEAL JUNTA GUARNIZIONE

137

4-453-11-A

D-06

CANALISATIONS DE FREINS
BREMSLEITUNGEN
BREAK PIPINGS
TUBOS PARA FRENOS
CANALIZZAZIONI PER FRENI

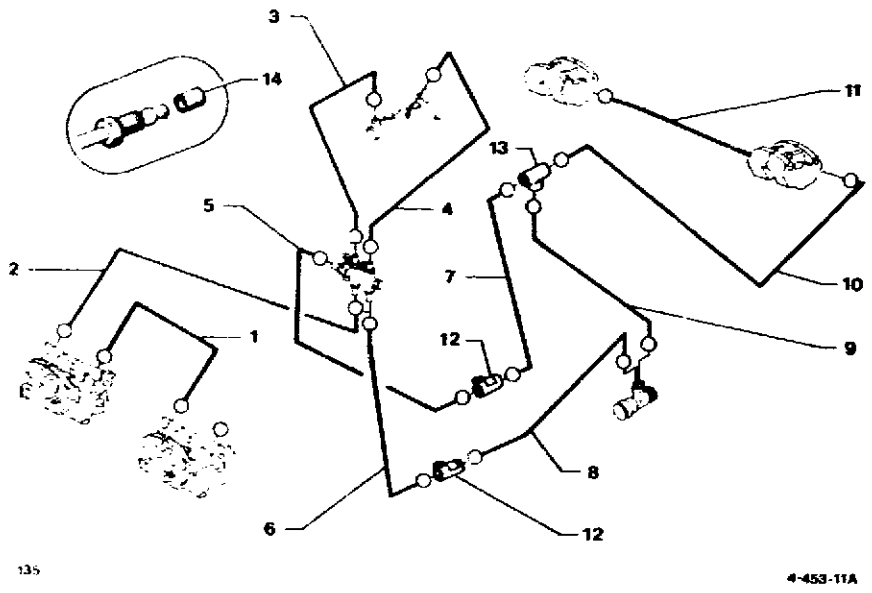

I	NUMEROS		K	4x4 12/79 ▶10/81	DESIGNATIONS
1	4CA	95 545 984	1	ϕ 3,5	**TUBE** ROHR PIPE TUBO TUBO
2	4CA	95 545 983	1		–
3	4CA	95 545 985	1		–
4	4CA	95 545 986	1		–
5	4CA	95 545 987	1		–
6	4CA	95 545 988	1	ϕ 3,5	**TUBE** ROHR PIPE TUBO TUBO
7	4CA	95 545 989	1		–
8	4CA	95 545 990	1		–
9	4CA	95 545 991	1		–
10	4CA	95 545 992	1		–
11	4FF	*75 498 417*	1	NFP	–
12	3MA	5 447 189	2		**RACCORD** VERBINDUNG UNION RACOR RACCORDO
13	4GX	5 438 353	1		–
14	9AM	21 888 009	?		**GARNITURE** DICHTUNG SEAL JUNTA GUARNIZIONE

137

4-453-11-B

D-07

CANALISATIONS DE FREINS
BREMSLEITUNGEN
BRAKE PIPINGS
TUBOS PARA FRENOS
CANALIZZAZIONI PER FRENI

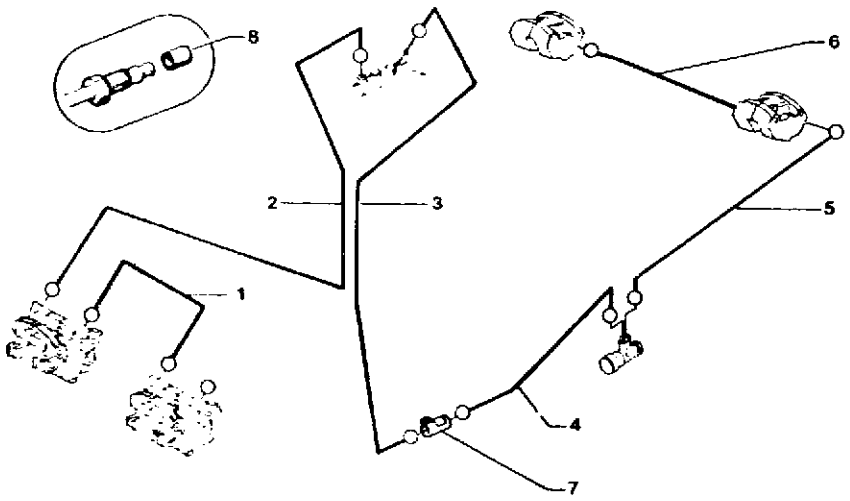

135 4-453-11B

I	NUMEROS		K	4 x 4 10/81►	DESIGNATIONS
1	4CA	95 545 984	1	LON 450	**TUBE** ROHR PIPE TUBO TUBO
2	4CA	95 568 827	1	LON 1385	–
3	4CA	95 568 828 - NFP	1	LON 1035	–
4	4CA	95 568 826 - NFP	1	LON 1310	–
5	4CA	95 568 825 - NFP	1	LON 1860	–
6	4FF	75 498 417 - NFP	1	LON 285	–
3MA		5 447 189	2		**RACCORD** VERBINDUNG UNION RACOR RACCORDO
9AM		21 888 009	?		**GARNITURE** DICHTUNG SEAL JUNTA GUARNIZIONE

137

4-453-20

D-08

MAITRE-CYLINDRE
HAUPTBREMSZYLINDER
MASTER CYLINDER
BOMBA DE FRENO
CILINDRO MAESTRO

1° LOCKHEED
2° STOP

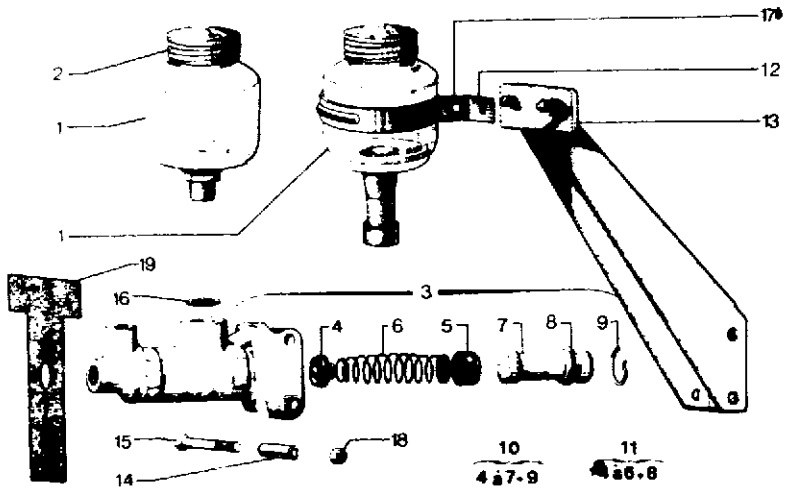

135

4-453-20

I	NUMEROS		K	▶7/76	DESIGNATIONS
1	4AM	AM 453 5 A	1	▶ 6/69	**RESERVOIR** BEHAELTER RESERVOIR DEPOSITO SERBATOIO
	4AM	*AM 453 5 C* RP HY 453 5 A	1	9/69 ▶	–
2	4TT	ZC 9 550 887 U	1		**BOUCHON** DECKEL COVER TAPA COPERCHIO
3	4AY	AY 453 03	1	1o - φ4,5 ▶ 5/69	**MAITRE-CYLINDRE** HAUPTBREMSZYLINDER MASTER CYLINDER BOMBA PRINCIPAL CILINDRO MAESTRO
	4AA	5 479 183	1	RMP φ4,5 5/69 ▶ 1/72	–
	4AA	5 479 184	1	RMP φ3,5 1/72 ▶ DEO - 5 439 528	–
4	4AM	AM 453 026 A	1	1o	**SOUPAPE** VENTIL VALVE VALVULA VALVOLA
	4AA	5 474 081 NFP		2o - ENS	**SOUPAPE ET RESSORT** VENTIL UND FEDER VALVE AND SPRING VALVULA Y MUELLE VALVOLA E MOLLA
5	4AA	5 443 531 NFP	1	1o - 21,4 x 9 3/73 ▶ RMP	**COUPELLE** MANSCHETTE CUP COPELA SCODELLINO
	4AM	*AM 453 10 B* RP AM 453 039 B	1	2o	–
6	4AA	5 443 530 NFP	1	1o - RMP 3/73 ▶	**RESSORT** FEDER SPRING MUELLE MOLLA
	4AA	5 474 081 - NFP	1	2o	–
7	4AM	*AM 453 12*	1	1o - NFP ▶ 5/69	**PISTON** KOLBEN PISTON PISTON PISTONE
	4AM	*AM 453 313 A*	1	1o - NFP 5/69 ▶	**PISTON AVEC COUPELLE** KOLBEN MIT MANSCHETTE PISTON WITH CUP PISTON CON COPELA PISTONE CON SCODELLINO
	4AA	*5 440 227*	1	2o - NFP 5/69 ▶	–
8	4AM	*AM 453 13*	1	13,2 x 22,2 x 6,7 NFP ▶ 5/69	**COUPELLE** MANSCHETTE CUP COPELA SCODELLINO
	4AM	AM 453 13 C	1	12 x 21,6 x 6,5 5/69 ▶ 1o	**COUPELLE DOUBLE-LEVRE** MANSCHETTE M.. DOPPELRAND DOUBLE-EDGE CUP COPELA DE LABIO DOBLE SCODELLINO LABBRODOPPIO
	4AM	*AM 453 13 B*	1	2o - NFP 5/69 ▶	–

MAITRE-CYLINDRE (Suite)
HAUPTBREMSZYLINDER (Forts.)
MASTER CYLINDER (Cont.)
BOMBA DE FRENO (Cont.)
CILINDRO MAESTRO (Cont.)

1° LOCKHEED
2° STOP

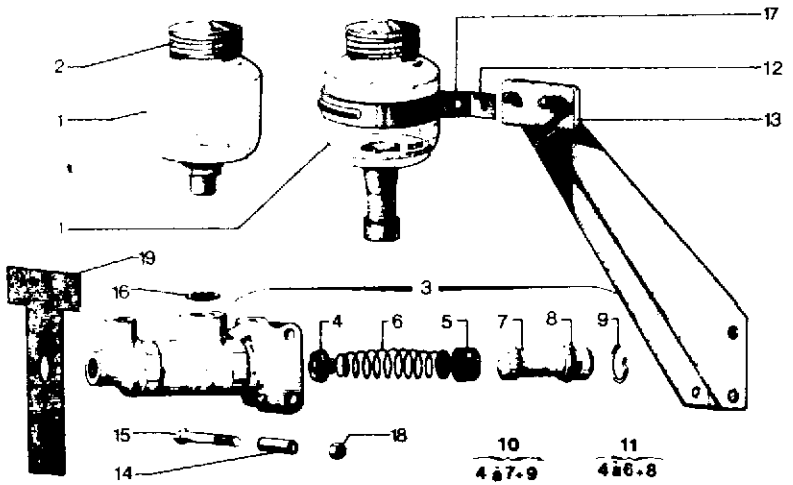

135

4-453-20

I	NUMEROS		K	▶ 7/76	DESIGNATIONS
9	4AM	AM 453 315 A NFP	1	10	**JONC** SICHERUNGSDRAHT CIRCLIP RETEN ARRESTO ELASTICO
	4AM	*AM 453 15 B*	1	20 - NFP	–
10	4AM	AM 453 039 B	1	10 ▶ 5/69	**NÉCESSAIRE COMPLET** REPAR.-NECESSAIRE, KOMPL. REPAIR KIT, COMPLETE NECESER REPARACION COMPL. OCCORRENTE RIPARAZ. COMP.
	4AM	AM 453 315 A	1	10 5/69 ▶1/72	–
	4AA	*5 440 228*	1	20 - NFP 5/69 ▶1/72	–
	4AA	*5 469 601*	1	10 - NFP 1/72 ▶	–

11	4AM	*AM 453 033 A*	1	10 - NFP	▶ 5/69	**NÉCESSAIRE RÉDUIT** REPAR.-NECESSAIRE, KLEIN REPAIR KIT, REDUCED NECESER REPARAC. REDUCIDO OCCORRENTE RIPARAZ. RIDOTTO
	4AM	*AM 453 314 A*	1	10 - NFP	5/69▶	–
	4AA	*5 440 229*	1	20 - NFP		–
12	4AM	*AM 453 62*	1	NFP	6/69▶	**COLLIER** SCHELLE COLLAR COLLAR COLLARE
13	4AY	*AY 453 193 A*	1	NFP	6/69▶	**SUPPORT** TRAEGER BRACKET SOPORTE SUPPORTO
14	4AY	AY 453 205	2	ϕ INT 9		**ENTRETOISE** ABSTANDSHUELSE DISTANCE PIECE SEPARADOR DISTANZIALE
15	9AY	23 863 019 NFP	2	TH 9 x 65		**VIS** SCHRAUBE SCREW TORNILLO VITE
16	9TT	22 478 009	1	16,3 x 22 x 1	▶ 6/69	**JOINT** DICHTUNG SEAL JUNTA GUARNIZIONE
17	9TT	25 241 009 NFP	2	HE 7 x 1,00	6/69▶	**ÉCROU** MUTTER NUT TUERCA DADO
18	9TT	79 03 032 247	2	HE 9 x 1,25		–
19	4AY	*AY 453 211 A*	1	NFP		**JONC D'ÉTANCHÉITÉ** DICHTBLATT SEALING JUNTA GUARNIZIONE

MAITRE-CYLINDRE
HAUPTBREMSZYLINDER
MASTER CYLINDER
BOMBA DE FRENO
CILINDRO MAESTRO

I	NUMEROS		K	(B) 10/75 ▶ 7/76 (CH) 11/72 ▶ 7/76 (NL) 10/75 ▶ 7/76	DESIGNATIONS
	4AA	*5 436 496*	1	ϕ 8 x 1,25 ▶ 6/73 NFP	**MAITRE-CYLINDRE TANDEM** TANDEM-HAUPTBREMSZYLINDER MASTER CYLINDER BOMBA PRINCIPAL CILINDRO MAESTRO DOPPIO
	4AA	5 447 393 - NFP		6/73 ▶	–
	4AA	*5 437 136*	1	NFP ▶ 6/73	**VIS RACCORD** VERBINDUNGSSCHRAUBE UNION SCREW TORNILLO RACOR VITE RACCORDO
	4AA	*5 437 137*	1	NFP ▶ 6/73	**RACCORD ORIENTABLE** DREHBARE VERBINDUNG UNION RACOR RACCORDO GIREVOLE
	4AA	*5 437 138*	1	NFP ▶ 6/73	**RACCORD PRIMAIRE** VERBINDUNG UNION RACOR RACCORDO
	4AA	5 415 208	2		**RÉSERVOIR COMPLET** KOMPLETTER BEHAELTER RESERVOIR, COMPLETE DEPOSITO COMPLETO SERBATOIO COMPLETO
	4HA	HY 453 349 A	2		**BOUCHON «NIVOCODE»** NIVOCODE-STOPFEN NIVOCODE PLUG TAPON NIVOCODE TAPPO NIVOCODE
	4TT	ZC 9 550 886 U	2		**JOINT DE BOUCHON** DICHTUNG F. STOPFEN SEAL JUNTA GUARNIZIONE PER TAPPO
	4CA	*5 421 786*	1	NFP	**SUPPORT DE 2e RÉSERVOIR** TRAEGER F. 2. BEHAELTER BRACKET F. 2ND RESERVOIR SOPORTE SEGUNDO DEPOSITO SUPPORTO SECONDO SERBATOIO
	4AM	AM 453 162 NFP			**COLLIER SUPPORT RÉSERVOIR** SCHELLE F. BEHAELTER COLLAR COLLAR COLLARE PER SERBATOIO
	4CA	*5 438 887*	1	NFP ▶ 6/73	**SUPPORT DE RÉSERVOIR ET MAITRE-CYLINDRE** TRAEGER F. BEHAELTER UND HAUPTBREMSZYLINDER BRACKET F. TANK SOPORTE DE DEPOSITO SUPPORTO PER SERBATOIO E CILINDRO MAESTRO
	4AA	5 504 804 NFP	1	▶ 6/73	**NÉCESSAIRE** REPARATURSATZ KIT NECESER OCCORRENTE
	4AA	5 504 803	1	6/73 ▶	–

137

4 453–22

D–11

MAITRE-CYLINDRE TANDEM – RÉSERVOIR
TANDEM-HAUPTBREMSZYLINDER-BEHAELTER
MASTER CYLINDER – TANK
BOMBA PRINCIPAL – DEPOSITO
CILINDRO MAESTRO DOPPIO – SERBATOIO

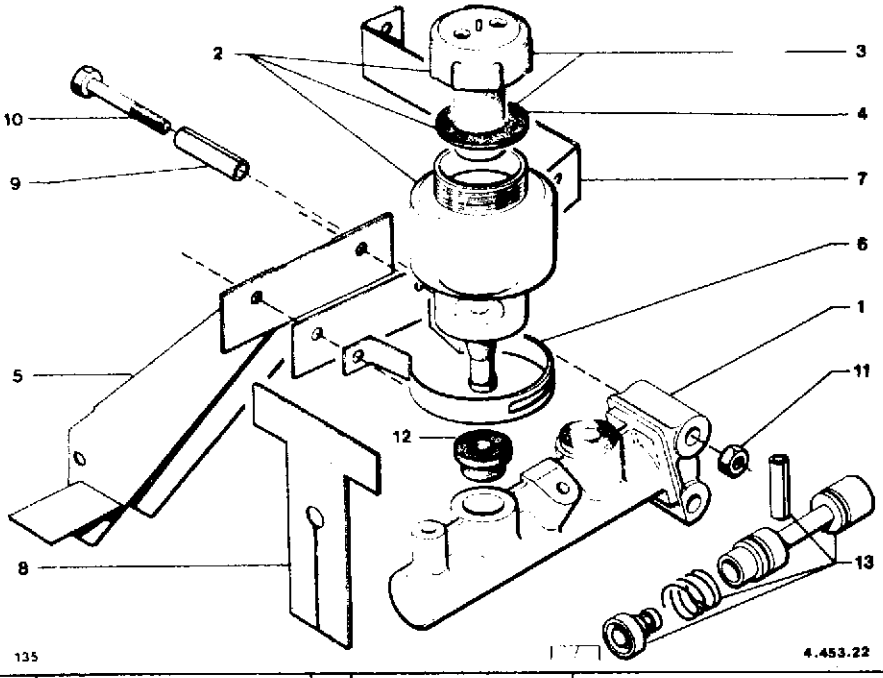

I	NUMEROS	K	7/76▶ 6/78	DESIGNATIONS

ATTENTION : LIQUIDE D'ORIGINE SYNTHÉTIQUE (SYN) ▶ 7/77
ACHTUNG : FLUESSIGKEIT KUENSTLICHEN URSPRUNGS (SYN)▶ 7/77
CAUTION : SYNTHETIC BASE FLUID (SYN)▶ 7/77
CUIDADO : LIQUIDO DE ORIGEN SINTETICO (SYN)▶ 7/77
ATTENZIONE : LIQUIDO DI ORIGINE SINTETICA (SYN) ▶7/77

: LIQUIDE D'ORIGINE MINÉRALE (MIN) 7/77 ▶
: FLUESSIGKEIT MINERALISCHEN URSPRUNGS (MIN) 7/77 ▶
: MINERAL BASE FLUID (MIN) 7/77 ▶
: LIQUIDO DE ORIGEN MINERAL (MIN) 7/77▶
: LIQUIDO DI ORIGINE MINERALE (MIN 7/77▶

1	4AA	95 555 655	1	SYN ▶ 7/77	**MAITRE-CYLINDRE COMPLET** KOMPL. HAUPTBREMSZYLINDER COMPLETE MASTER CYLINDER BOMBA PRINCIPAL DE FRENO CILINDRO MAESTRO COMPL.
	4AY	75 491 952	1	MIN 7/77▶	–
2	4AA	5 415 208	2	SYN	**RÉSERVOIR COMPLET** KOMPLETTER BEHAELTER COMPLETE TANK DEPOSITO COMPLETO SERBATOIO COMPLETO
	4AM	5 411 945	2	MIN	–
3	4HA	HY 453 349 A	2		**BOUCHON «NIVOCODE»** NIVOCODE-STOPFEN NIVOCODE PLUG TAPON NIVOCODE TAPPO NIVOCODE
	4AM	5 411 944	2	MIN	
4	4TT	ZC 9 550 886 U	2	SYN	**JOINT DE BOUCHON** DICHTUNG F. STOPEN PLUG SEAL JUNTA DE TAPON GUARNIZIONE PER TAPPO
	4AM	*5 438 851*	2	MIN - NFP	–
5	4AY	AY 453 193 A	1		**SUPPORT DE RÉSERVOIR** TRAEGER F. BEHAELTER TANK BRACKET SOPORTE DE DEPOSITO SUPPORTO PER SERBATOIO
6	4AM	AM 453 162 NFP	2		**COLLIER SUPPORT RÉSERVOIR** SCHELLE F. BEHAELTER TANK COLLAR COLLAR DE DEPOSITO COLLARE PER SERBATOIO
7	4CA	*5 421 786*	1	NFP	**SUPPORT DE 2e RÉSERVOIR** TRAEGER F. 2. BEHAELTER BRACKET F. 2ND TANK SOPORTE SEGUNDO DEPOSITO SUPPORTO SECONDO SERBATOIO
8	4AY	*AY 453 211 A*	1	NFP	**JOINT D'ÉTANCHÉITÉ** DICHTUNG SEALING JUNTA GUARNIZIONE
9	4AY	AY 453 205	2	φ INT 9	**ENTRETOISE** ABSTANDSHUELSE SPACER SEPARADOR DISTANZIALE
10	9AY	23 836 019	2	TH 9 x 65	**VIS** SCHRAUBE SCREW TORNILLO VITE
11	9DA	79 03 032 247	2	HE 9 x 1,25	**ÉCROU** MUTTER NUT TUERCA DADO

137

4-453-22

D-12

MAITRE-CYLINDRE TANDEM – RÉSERVOIR (Suite)
TANDEM-HAUPTBREMSZYLINDER-BEHAELTER (Forts.)
MASTER CYLINDER – TANK (Cont.)
BOMBA PRINCIPAL – DEPOSITO (Cont.)
CILINDRO MAESTRO DOPPIO – SERBATOIO (Cont.)

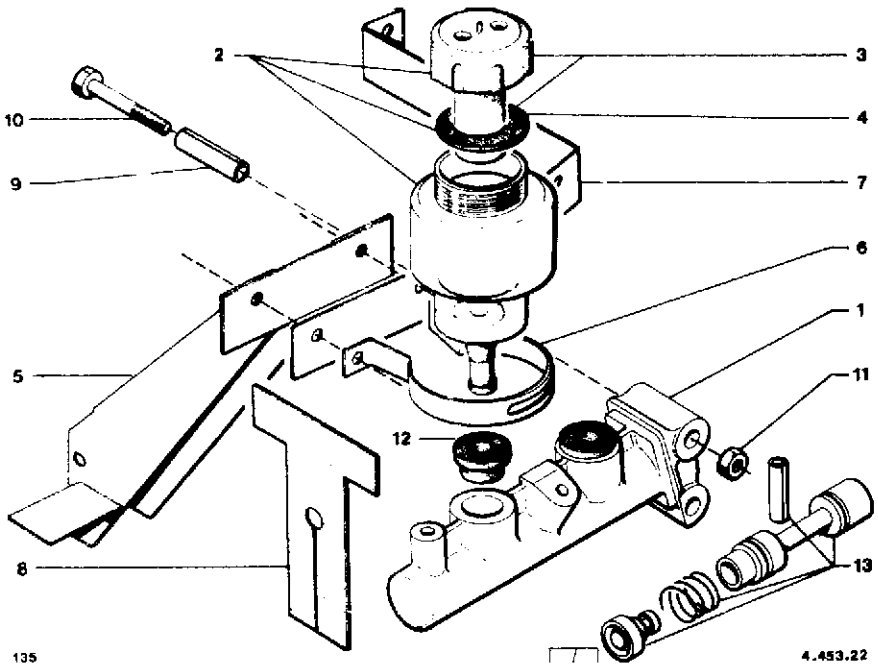

I	NUMEROS	K	7/76 ▶ 6/78	DESIGNATIONS
12	4CD	*5 509 368* RP 95 538 713	2	CC	**MANCHON** GUMMIHUELSE RUBBER SLEEVE MANGUITO CAUCHO MANICOTTO GOMMA
13	4RB	75 511 661	1	SYN	**NÉCESSAIRE** REPARATUR-NECESSAIRE REPAIR KIT NECESER OCCORRENTE
	4AM	95 562 402	1	SYN	**FILTRE** FILTER FILTER FILTRO FILTRO
	4AM	75 511 660	1	MIN	–

ATTENTION : **LIQUIDE D'ORIGINE SYNTHÉTIQUE (SYN) ▶ 7/77**
ACHTUNG : FLUESSIGKEIT KUENSTLICHEN URSPRUNGS (SYN) ▶7/77
CAUTION : SYNTHETIC BASE FLUID (SYN) ▶ 7/77
CUIDADO : LIQUIDO DE ORIGEN SINTETITO (SYN) ▶ 7/77
ATTENZIONE : LIQUIDO DI ORIGINE SINTETICA (SYN) ▶7/77

: **LIQUIDE D'ORIGINE MINÉRALE (MIN) 7/77▶**
: FLUESSIGKEIT MINERALISCHEN URSPRUNGS (MIN) 7/77▶
: MINERAL BASE FLUID (MIN) 7/77 ▶
: LIQUIDO DE ORIGEN MINERAL (MIN) 7/77 ▶
: LIQUIDO DI ORIGINE MINERALE (MIN) 7/77 ▶

137
4–453–22–A
D–13

MAITRE-CYLINDRE TANDEM – RÉSERVOIR I.C.P.
TANDEM-HAUPTBREMSZYLINDER – TANK
TANDEM MASTER CYLINDER – RESERVOIR
BOMBA PRINCIPAL TANDEM – DEPOSITO
CILINDRO MAESTRO TANDEM – SERBATOIO

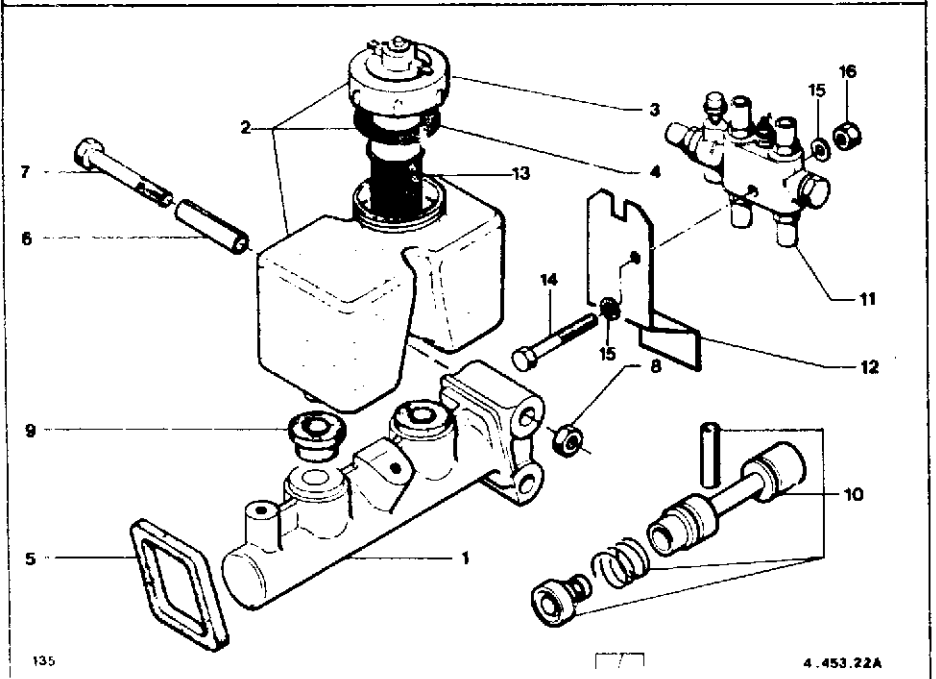

I	NUMEROS		K	(MIN) 6/78 ▶	DESIGNATIONS
1					**MAITRE-CYLINDRE (TANDEM)** TANDEM-HAUPTBREMSZYLINDER TANDEM MASTER CYLINDER BOMBA PRINCIPAL TANDEM CILINDRO MAESTRO TANDEM
	4AZ	95 588 595	1	ENS 7/78 ▶ (I = 1 + 2 + 13)	

2	4AA	95 588 594	1	ENS (I = 2 + 13) 5/82 ▶	**RÉSERVOIR** BEHAELTER RESERVOIR DEPOSITO SERBATOIO
3	4AM	75 491 744	1	«NIVOCODE»	**BOUCHON** STOPFEN PLUG TAPON TAPPO
4	4AA	75 486 303	1		**JOINT DE BOUCHON** DICHTUNG F. STOPFEN SEAL JUNTA GUARNIZIONE DEL TAPPO
5	4AY	*AY 453 211 A*	1	NFP	**JOINT D'ÉTANCHÉITÉ** DICHTUNG SEALING JUNTA GUARNIZIONE
	4AM	AM 453 211	1	4 x 4	–
6	4AY	AY 453 205	2	ϕ INT 9	**ENTRETOISE** ABSTANDSSTUECK SPACER SEPARADOR DISTANZIALE
7	9AY	23 836 019	2	TH 9 x 65	**VIS** SCHRAUBE SCREW TORNILLO VITE
8	9DA	79 03 032 247	2	HE 9 x 1,25	**ÉCROU** MUTTER NUT TUERCA DADO
9	4ZA	*5 509 368* RP 95 538 713	2		**MANCHON** STUTZEN SLEEVE MANGUITO MANICOTTO
10	4AM	75 511 660	1	▶ 3/80	**NÉCESSAIRE RÉPARATION** REPARATURNECESSAIRE REPAIR KIT NECESER DE REPARACION OCCORRENTE DI RIPARAZIONE
	4AY	95 562 403	1	3/80 ▶	– **FILTRE** – FILTER – FILTER – FILTRO – FILTRO
11	4BF	5 445 915	1	12/79 ▶	**INDICATEUR CHUTE PRESSION** DRUCHABFALLANZEIGER PRESSURE FALL INDICATOR INDICADOR BAJA PRESION INDICATORE CADUTA PRESSIONE
12	4CA	95 547 184 **NFP**	1	12/79 ▶	**SUPPORT I.C.P.** HALTER F. DA-ANZEIGER BRACKET F. PF INDICATOR SOPORTE DE INDICADOR SUPPORTO PER INDICATORE

MAITRE-CYLINDRE TANDEM – RÉSERVOIR – I.C.P. (Suite)
TANDEM-HAUPTBREMSZYLINDER – TANK (Forts.)
TANDEM MASTER CYLINDER – RESERVOIR (Cont.)
BOMBA PRINCIPAL TANDEM – DEPOSITO (Cont.)
CILINDRO MAESTRO TANDEM – SERBATOIO (Cont.)

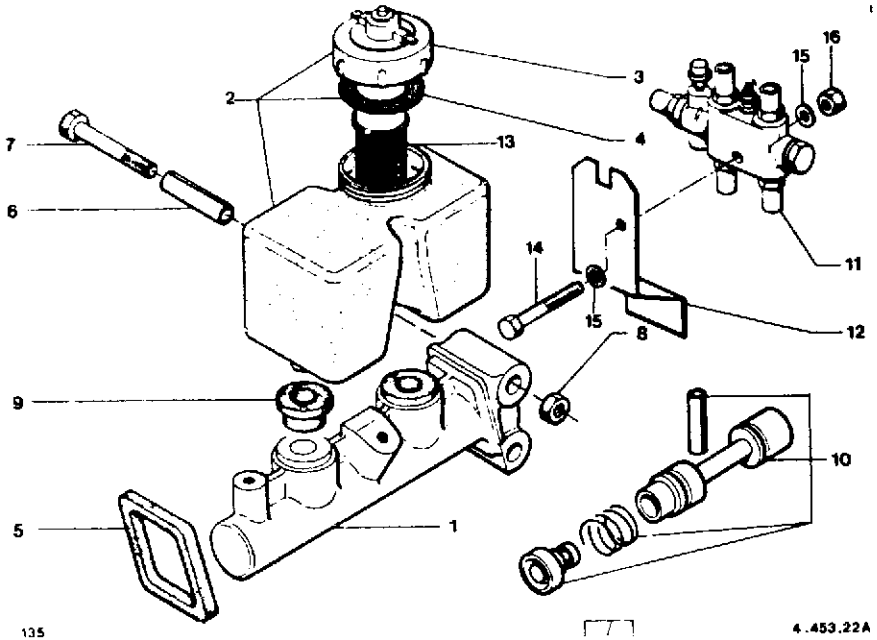

I	NUMEROS		K	(MIN) 6/78 ▶	DESIGNATIONS
13	4AZ	95 493 138	1	1/80 ▶	**FILTRE** FILTER FILTER FILTRO FILTRO
14	9TT	79 03 101 776	1	12/79 ▶	**VIS** SCHRAUBE SCREW TORNILLO VITE
15	9AA	79 03 058 029	2	12/79 ▶	**RONDELLE** SCHEIBE WASHER ARANDELA RONDELLA
16	1VD	79 03 034 071	1	12/79 ▶	**ÉCROU** MUTTER NUT TUERCA DADO

137

4-453-30

D-15 →

CYLINDRES DE ROUES AVANT
VORDERE RADZYLINDER
FRONT WHEEL CYLINDERS
BOMBINES DE RUEDAS DELANTERAS
CILINDRI RUOTE ANTERIORI

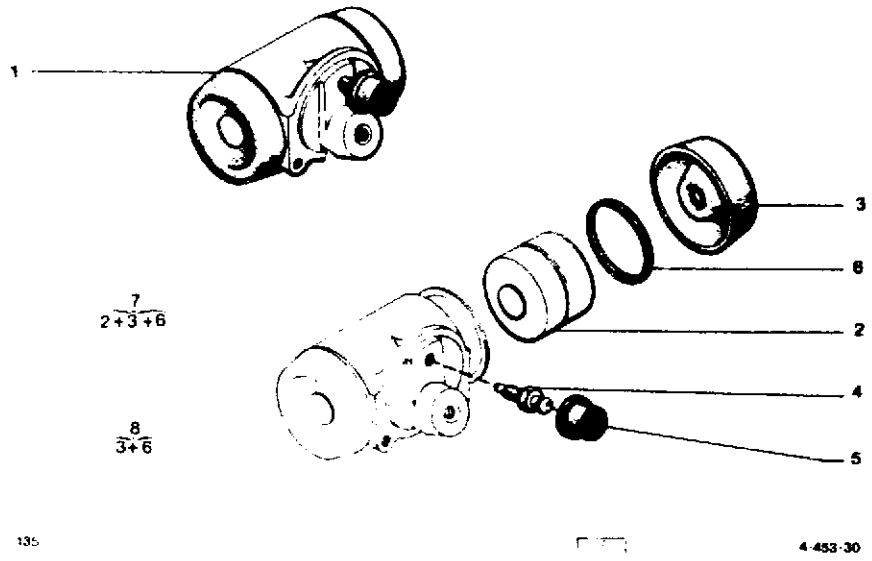

!	NUMEROS		K	(SYN) ▶7/77	DESIGNATIONS
		1o «DBA» – 2o «FEG»			
1	4AA	AZU 453 04	2	1o - φ 9 x 1,25 ▶ 1/72	**CYLINDRE COMPLET** KOMPLETTER RADZYLINDER COMPLETE CYLINDER BOMBINE COMPLETO CILINDRO COMPLETO
	4AA	75 530 008	2	2o - φ 9 x 1,25 ▶ 1/72	–
	4AA	75 492 434	2	1o - φ 8 x 1,25 1/72 ▶	–
2	4AA	*AM 453 19 A*	4	1o - 28,57 x 27 - NFP	**PISTON** KOLBEN PISTON PISTON PISTONE
	4AM	*AM 453 19 B*	4	2o - 28,57 x 27 - NFP	–
3	4AM	*AM 453 24*	4	1o - 7 x 34 x 12,5 - NFP	**CAPUCHON** DICHTKAPPE SEALING CAP CAPUCHON CAPPUCCIO
	4AM	*AM 453 24 A*	4	2o - 7 x 34 x 12,5 - NFP	–
4	4AA	*5 411 350* RP 95 578 347 DEQ 1 - 79 41 401 043	2		**VIS DE PURGE** ENTLUEFTUNGSSCHRAUBE DRAIN SCREW TORNILLO DE PURGA VITE SPURGO
5	4TT	79 41 401 043	2		**CAPUCHON DE VIS** KAPPE CAP CAPUCHON CAPPUCCIO
6	9AM	24 982 009	4	22,5 x 27,9 x 2,7	**JOINT TORIQUE** RINGDICHTUNG RING SEAL JUNTA TORICA GOMMINO
7	4AA	95 554 041 RP 95 585 487	2	2o 1/72 ▶	**NÉCESSAIRE COMPLET** REPARAT.-NECESSAIRE, KOMPL. REPAIR KIT, COMPLETE NECESER REPARACION COMPL. OCCORRENTE RIPARAZ. COMPL.
8	4AA	95 585 487	2	1o 1/72 ▶	**NÉCESSAIRE RÉDUIT** REPARAT.-NECESSAIRE, KLEIN REPAIR KIT, REDUCED NECESER REPARAC. REDUCIDO OCCORRENTE RIPAR. RIDOTTO

CYLINDRES DE ROUES ARRIERE
HINTER RADZYLINDER
4-453-40 REAR WHEEL CYLINDERS
BOBINES DE RUEDAS TRASERAS
E-15 CILINDRI RUOTE POSTERIORI

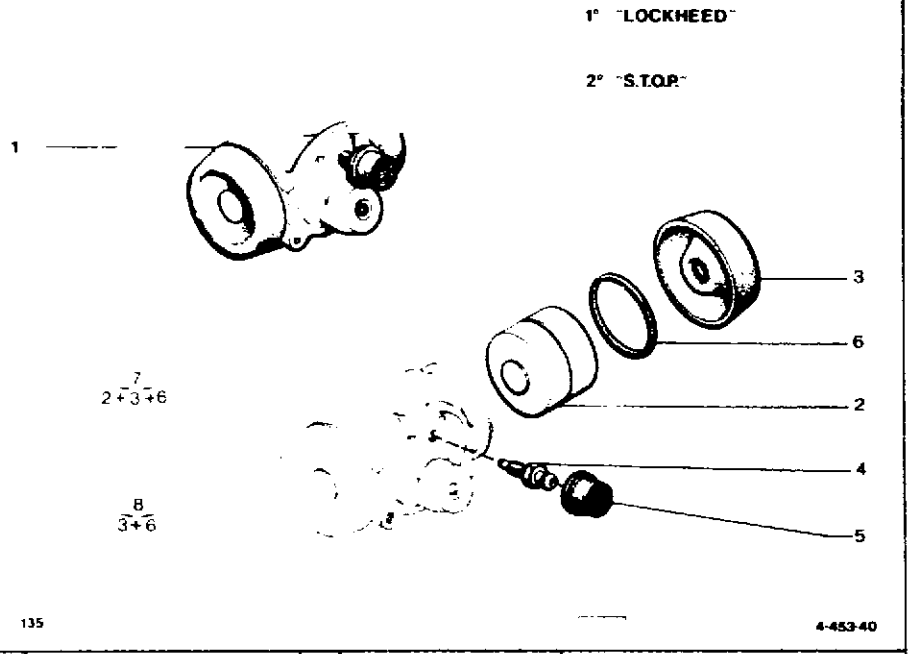

I	NUMEROS		K	(SYN) ▶ 7/77	DESIGNATIONS
1	4AM	AM 453 05 A	2	9 x 1,25 ▶1/72	**CYLINDRE COMPLET** KOMPLETTER CYLINDER COMPLETE CYLINDER BOMBINE COMPLETO CILINDRO COMPLETO
	4AA	5 488 527	2	8x 1,25 9/76 ▶ RMP 1/72 ▶9/76	–
2	4AM	*AM 453 21*	4	17,5 x 16,5 - NFP	**PISTON** KOLBEN PISTON PISTON PISTONE
3	4AM	*AM 453 69*	4	NFP	**CAPUCHON** DICHTKAPPE SEALING CAP CAPUCHON CAPPUCCIO
	9AA	24 951 009	4	12,7 x 18,1 x 2,7	**JOINT TORIQUE** RINGDICHTUNG RING SEAL JUNTA TORICA GOMMINO
4	4AA	95 578 947	2		**VIS DE PURGE** ENTLUEFTUNGSSCHRAUBE DRAIN, SCREW TORNILLO DE PURGA VITE SPURGO
		DEO 1 - 79 41 401 043			
5	4AM	AM 453 26	2		**RESSORT** FEDER SPRING MUELLE MOLLA
6	4TT	79 41 401 043	2		**CAPUCHON DE VIS** KAPPE CAP CAPUCHON CAPPUCCIO
7	4AM	5 506 709	4	⌀ 19 - H 7	**COUPELLE** MANSCHETTE CUP COPELA SCODELLINO
8	4AM	*AM 453 036*	2	NFP ▶ 9/76	**NECESSAIRE COMPLET** REPARAT.-NECESSAIRE, KOMPL. REPAIR KIT, COMPLETE NECESER REPARACION COMPL. OCCORRENTE RIPARAZ. COMPL.
9	4AA	5 506 709	2	RMP 9/76 ▶	**NECESSAIRE REDUIT** REPARAT.-NECESSAIRE, KLEIN REPAIR KIT, REDUCED NECESER REPARAC. REDUCIDO OCCORRENTE RIPAR. RIDOTTO
				(CH) 11/72 ▶ 9/76 (NL) (B) 10/75 ▶ 9/76	**PIECES SPECIALES** SPEZIALTEILE SPECIAL PARTS PIEZAS ESPECIALES PEZZI SPECIALI
1	4AA	5 488 527	2	⌀ 8 x 1,25	**CYLINDRE COMPLET** KOMPLETTER RADZYLINDER COMPLETE CYLINDER BOMBINE COMPLETO CILINDRO COMPLETO
2	4AM	*AMB 453 21*	4	⌀ 17,5 - NFP	**PISTON** KOLBEN PISTON PISTON PISTONE
3	4AM	*AM 453 69*	4	NFP	**CAPUCHON** DICHTKAPPE SEALING CAP CAPUCHON CAPPUCCIO
	9AA	24 951 009	4	12,7 x 18,1 x 2,7	**JOINT TORIQUE** RINGDICHTUNG RING SEAL JUNTA TORICA GOMMINO

137

4-453-40-A

B -14

CYLINDRES DE ROUES ARRIERE
HINTERE RADZYLINDER
REAR WHEEL CYLINDERS
BOMBINES DE RUEDAS TRAS.
CILINDRETTI PER RUOTE POST.

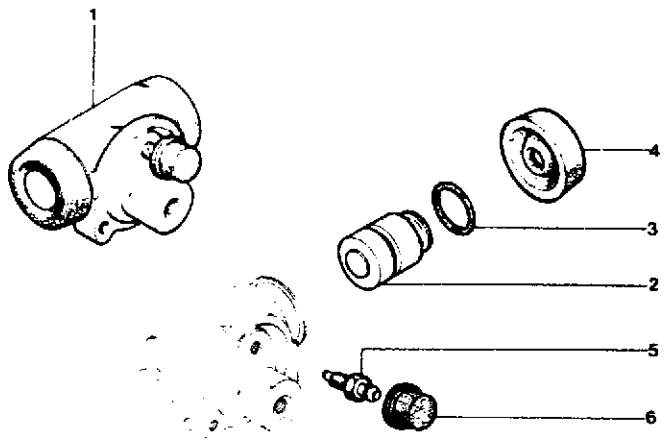

7
3+4

8
2+3+4

135

4-453-40 A

I	NUMEROS		K	(MIN) 7/77 ▶	DESIGNATIONS
1	4AY	75 491 955	2	φ 10 x 1,00 ▶ 7/78	**CYLINDRE COMPLET** KOMPLETTER RADZYLINDER COMPLETE CYLINDER BOMBINE COMPLETO CILINDRETTO COMPLETO
	4AM	AMN 453 05	2	φ 8 x 1,25 7/78 ▶	–
2	4AM	*AM 453 21 B*	4	φ 16 - H 26 - NFP	**PISTON** KOLBEN PISTON PISTON PISTONE
3	9AM	25 062 009	4	11,2 x 16,6 x 2,7	**JOINT TORIQUE** RINGDICHTUNG RING SEAL JUNTA TORICA GOMMINO
4	4AM	*AM 453 69*	4	NFP	**CAPUCHON** DICHTKAPPE DUST-COVER GUARDAPOLVO PARAPOLVERE
5	4AA	95 578 347	2		**VIS DE PURGE** ENTLUEFTUNGSSCHRAUBE DRAIN SCREW TORNILLO DE VACIADO VITE DI SPURGO
6	4TT	79 41 401 043	2		**CAPUCHON DE VIS** KAPPE F. SCHRAUBE SCREW CAP GUARDA-POLVO DE TORNILLA PARAPOLVERE PER VITE
7	4AM	AMN 453 033 A	2		**NÉCESSAIRE RÉDUIT** REPARAT.-NECESSAIRE KLEIN REPAIR KIT, REDUCED NECESER REDUCIDO OCCORRENTE RIDOTTO
8	4AM	*AMN 453 036 A*	2	NFP	**NÉCESSAIRE COMPLET** REPAR.-NECESSAIRE, KOMPL. REPAIR KIT, COMPLETE NECESER COMPLETO OCCORRENTE COMPLETO

137

4-454-10

E-13

FREIN A MAIN
HANDBREMSE
HANDBRAKE
FRENO DE MANO
FRENO A MANO

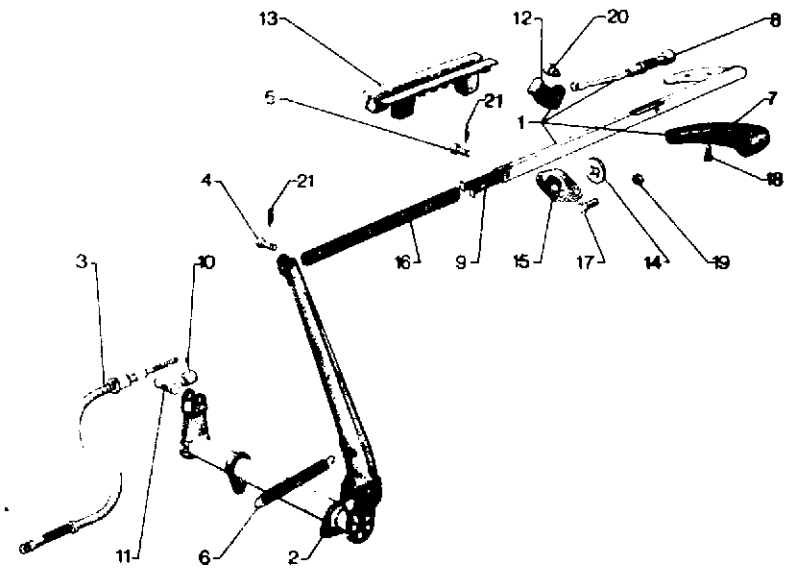

135

4-454-10

I	NUMEROS		K	▶ 7/77	DESIGNATIONS
1	4AY	*5 403 366* RP 95 551 820	1 1	(N) (DK) (CH) 12/70 ▶ TT 7/71 ▶	**TIRETTE COMPLETE** KOMPLETTE ZUGSTANGE HANDLE ASSY TIRADOR COMPLETO TIRANTE COMPLETO
2	4AM	AM 454 4	1		**LEVIER** UEBERTRAGUNGSHEBEL LEVER PALANCA LEVA
3	4AA	AZ 454 1 F	2	LON 406	**CABLE** ZUG CABLE CABLE CAVO
4	4AA	A 314 92	1	φ 6 x 17	**AXE** BOLZEN PIN EJE PERNO
5	4AA	5 417 536	1	φ 6 x 20	–
6	4AM	AM 454 9	1		**RESSORT** FEDER SPRING MUELLE MOLLA
7	4AM	AM 454 249 A	1		**JEU DE DEMI-POIGNÉES** GRIFF HANDLE MANECILLA MANIGLIA
8	4AM	*AM 454 50 B*	1	NFP ▶ 7/71	**BOUTON AVEC TIGE** KNOPF MIT BETAETIG. STANGE KNOB WITH ROD BOTON CON VARILLA PULSANTE CON ASTA
	4AA	5 403 363	1 1	(N) (DK) (CH) 12/70 ▶ TT 7/71 ▶	–
9	4AY	*AY 454 53*	1	NFP	**TIRANT** STREBE LINK RAIL TIRANTE TIRANTE
10	4AY	AY 454 74	2	φ 7 x 1,00	**ÉCROU A OREILLE** FLUEGELMUTTER WING NUT TUERCA CON ALETA DADO AD ALETTA
11	4AA	A 454 75	2	8,5 x 15 x 28	**BARILLET** KLEMMSTUECK TRUNNION BARRILETE MORSETTO
12	4AM	*AM 454 173 B*	1	NFP ▶ 7/71	**CLIQUET** SPERRKLINKE RATCHET TRINQUETE DENTE
	4TT	GX 42 186 01 A	1 1	(N) (DK) (CH) 12/70 ▶ TT 7/71 ▶	–
13	4AY	AY 454 117 NFP	1		**CRÉMAILLERE** ZAHNSTANGE RACK CREMALLERA CREMAGLIERA

FREIN A MAIN (Suite)
HANDBREMSE (Forts.)
HANDBRAKE (Cont.)
FRENO DE MANO (Cont.)
FRENO A MANO (Cont.)

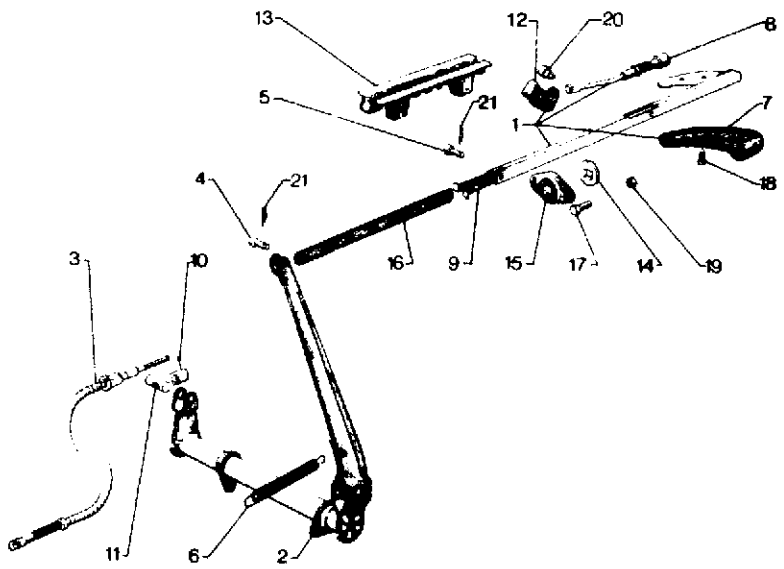

135 4-454-10

I	NUMEROS		K	▶ 7/77	DESIGNATIONS
14	4AM	*AM 454 181*	1	NFP	**FEUTRE D'ÉTANCHÉITÉ** DICHTFILZ SEALING FELT FIELTRO DE ESTANQUEIDAD FELTRO DI TENUTA
15	4AM	*AM 454 182*	1	NFP	**CAGE** HALTEBLECH HOLDING PLATE CHAPA DE RETENCION LAMIERA RITENUTA
16	4AY	*AY 454 210 A*	1	NFP	**BIELLETTE** GESTAENGE CONNECTION RODS BIELTA BIELLETTA
17	9GX	79 03 201 012	2	TH 5 x 14	**VIS** SCHRAUBE SCREW TORNILLO VITE
18	9AA	79 03 005 061	2	TFB 4 x 12	– –
19	9TT	79 03 032 006	2	HE 5 x 0,80	**ÉCROU** MUTTER NUT TUERCA DADO
20	4AA	GX 42 306 01 A NFP	1	ϕ 4,5 - LON 3,85 (N) (DK) (CH) 12/70 ▶ TT 7/71 ▶	**AXE** AXE PIN EJE PERNO
21	7GX	79 03 066 999	2		**ÉPINGLE D'AXE** SPANGE F. AXE PIN CLIP ALFILE DE EJE FORCELLINA ARRESTO

137

4–454–11

E-11

FREIN A MAIN – TIRETTE
HANDBREMSE – ZUGSTANGE
HAND BRAKE – CONTROL ROD
FRENO DE MANO – TIRADOR
FRENO A MANO – TIRANTE

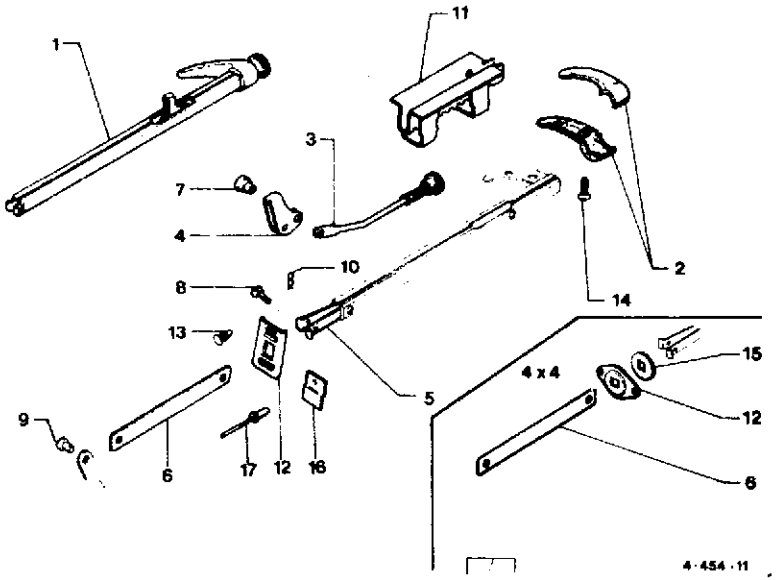

I	NUMEROS		K	7/77 ▶	DESIGNATIONS
1	4CD	95 551 820	1	6/80 ▶	**TIRETTE COMPLETE** KOMPLETTE ZUGSTANGE COMPLETE CONTROL ROD TIRADOR COMPLETO TIRANTE COMPLETO
2	4AM	AM 454 249 A	1	ENS	**DEMI-POIGNÉE** HANDGRIFF HANDLE MANECILLA IMPUGNATURA
3	4AA	5 403 363	1	▶ 6/80	**BOUTON AVEC TIGE** KNOPF MIT STANGE KNOB WITH ROD BOTON CON VARILLA PULSANTE CON ASTINA
	4CD	95 551 821 - NFP	1	6/80 ▶	–
4	4TT	GX 42 186 01 A	1		**CLIQUET** SPERRKLINKE RATCHET TRINQUETE DENTE
5	4AY	*AY 454 53*	1	NFP	**TIRANT** STREBE CONTROL RAIL TIRADOR TIRANTE
6	4CA	*75 514 807*	1	2 ϕ 6,5 - ENT 115 NFP	**BIELLETTE** ZWISCHENGESTAENGE CONNECTING ROD BIELETA BIELLETTA
	4CA	75 498 357	1	4 x 4	–
7	4AA	GX 42 306 01 A NFP	1	ϕ 4,5- LON 3,85	**AXE** BOLZEN PINE EJE PERNO
8	4AA	5 417 536	1	ϕ 6 x 20	–
9	4AA	A 314 92	1	ϕ 6 x 17	–
10	7GX	79 03 066 999	2		**ÉPINGLE D'AXE** SPANGE F. BOLZEN PIN CLIP PINCETA DE EJE FORCELLINA PER PERNO
11	4AY	AY 454 177	1		**CRÉMAILLERE** KERBSTUECK RACK CREMALLERA CREMAGLIERA
12	4AA	5 432 385	1	31 x 57 x 1 ϕ 4	**PLAQUETTE** DICHTPLAKETTE SEALING PLAQUETA PLACCHETTA
	4AM	*AM 454 182*	1	4 x 4 - NFP	–
13	4AA	*5 431 533* RP 79 03 077 078	1		**BOUTON PLASTIQUE** PLASTIK-KNOPF PLASTIC KNOB BOTON PLASTICO BOTTONE PLASTICA
14	8AA	79 03 005 061	2	TFB 4 x 12	**VIS** SCHRAUBE SCREW TORNILLO VITE
15	4AM	*AM 454 181*	1	4 x 4 - NFP	**FEUTRE** FILSTUECK FELT PIECE FIELTRO FELTRO

137

4-454-11

B-10

FREIN A MAIN – TIRETTE (Suite)
HANDBREMSE – ZUGSTANGE (Forts)
HAND BRAKE – CONTROL ROD (Cont.)
FRENO DE MANO – TIRADOR (Cont.)
FRENO A MANO – TIRANTE (Cont.)

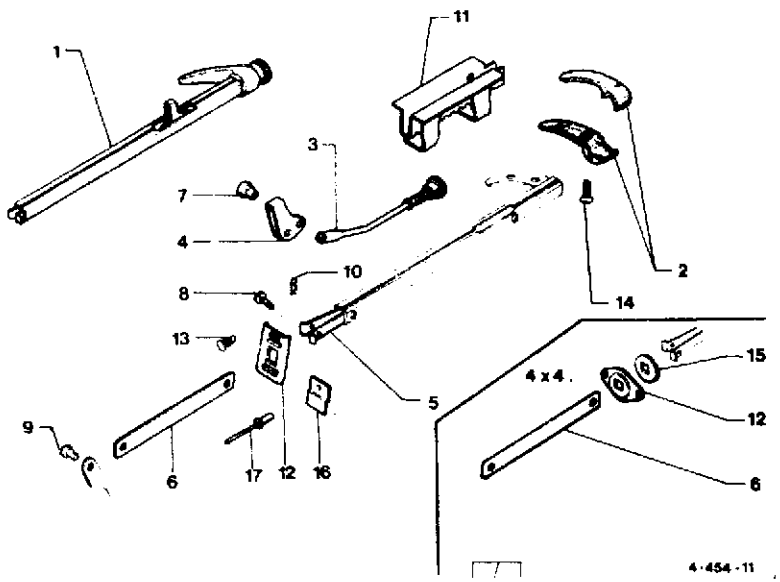

I	NUMEROS		K	7/77 ▶	DESIGNATIONS
16	4AY	95 551 818	1	1/80 ▶	**PATTE** LASCHE BRACKET PATA STAFFA
17	7AZ	79 03 072 243	1	ϕ 3,2	**RIVET** NIET RIVET REMACHE RIVETTO

137
4-454-12
E-09

FREIN A MAIN – LEVIERS – CABLES
HANDBREMSE – HEBEL UND ZUEGE
HAND BRAKE – LEVERS AND CABLES
FRENO DE MANO – PALANCAS Y CABLES
FRENO A MANO – LEVE E CAVI

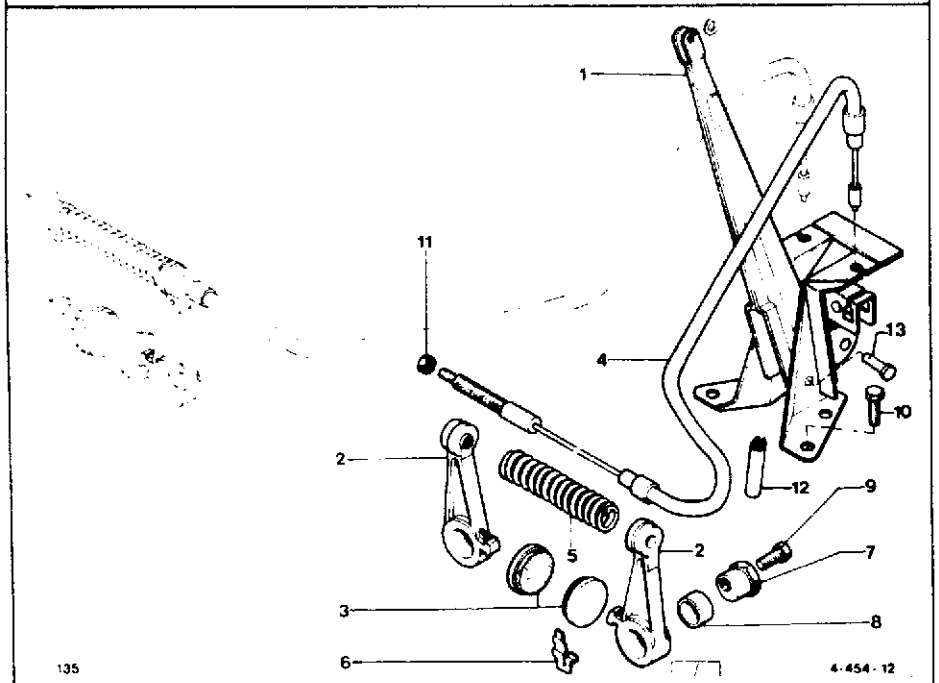

I	NUMEROS		K	7/77 ▶	DESIGNATIONS
1	4AY	5 506 419	1		**LEVIER** HEBEL LEVER PALANCA LEVA
	4FF	75 498 358 - NFP	1	4 x 4	–
2	4AM	5 420 269	4		**LEVIER BAGUE** AUSGEBUECHSTER HEBEL BUSHED LEVER PALANCA CON CASQUILLO LEVA IMBOCCOLATA
3	4AY	95 534 349	1	«FERODO» 11/78 ▶	**JEU DE 4 PLAQUETTES** SATZ VON 4-PLAKETTEN FOUR-PAD SET JUEGO DE 4 PLAQUETAS SERIE DI 4 PLACCHETTE
4	4AY	75 491 847	1	1o - G ▶ 3/78	**CABLE** ZUG CABLE CABLE CAVO
	4AY	75 492 021	1	1o - G 3/78 ▶	–
	4AY	75 491 848	1	1o - D	–
	4AA	95 493 494	1	2o - D	–
5	4AM	5 420 271	2	14 SPIR.	**RESSORT** FEDER SPRING MUELLE MOLLA
6	4AM	5 420 272	2	EXT G - INT D	**RESSORT ANTI-BRUIT** FEDER ZUR GERAESCHDAEMPF. ANTI-RATTLE SPRING MUELLE ANTIRRUIDO MOLLA ANTIRUMORE
	4AM	5 420 267	1	INT G - EXT D	–
7	4GX	5 435 903	4		**EXCENTRIQUE** EXZENTER ECCENTRIC EXCENTRICA ECCENTRICO
8	4AA	5 414 687	4	18 x 20 x 9,4	**COUSSINET** LAGERSCHALE BEARING BUSH COJINETE CUSCINETTO
9	4AM	5 421 257	4	TH 9 x 1,25 - 35	**VIS** SCHRAUBE SCREW TORNILLO VITE
10	9TT	79 03 101 769	4	TH 7 x 16	–
11	9TT	*25 241 009*	2	HE 1 x 1,00 - 5,5 NFP	**ÉCROU** MUTTER NUT TUERCA DADO
	9TT	*25 221 019* RP 79 03 032 071	2	HE 7 x 1,00 - 3,5	–
12	6MA	5 465 744	1		–
					PROTECTION ABSCHIRMUNG PROTECTION PROTECCION PROTEZIONE
13	4AY	5 506 422	1	ϕ 10 - LON 25,5	**AXE DE LEVIER** HEBELBOLZEN LEVER PIN EJE DE PALANCA PERNO DELLA LEVA

137

4-454-12

E -08

FREIN A MAIN – LEVIERS – CABLES (Suite)
HANDBREMSE – HEBEL UND ZUEGE (Forts.)
HAND BRAKE LEVERS AND CABLES (Cont.)
FRENO DE MANO – PALANCAS Y CABLES (Cont.)
FRENO A MANO – LEVE E CAVI (Cont.)

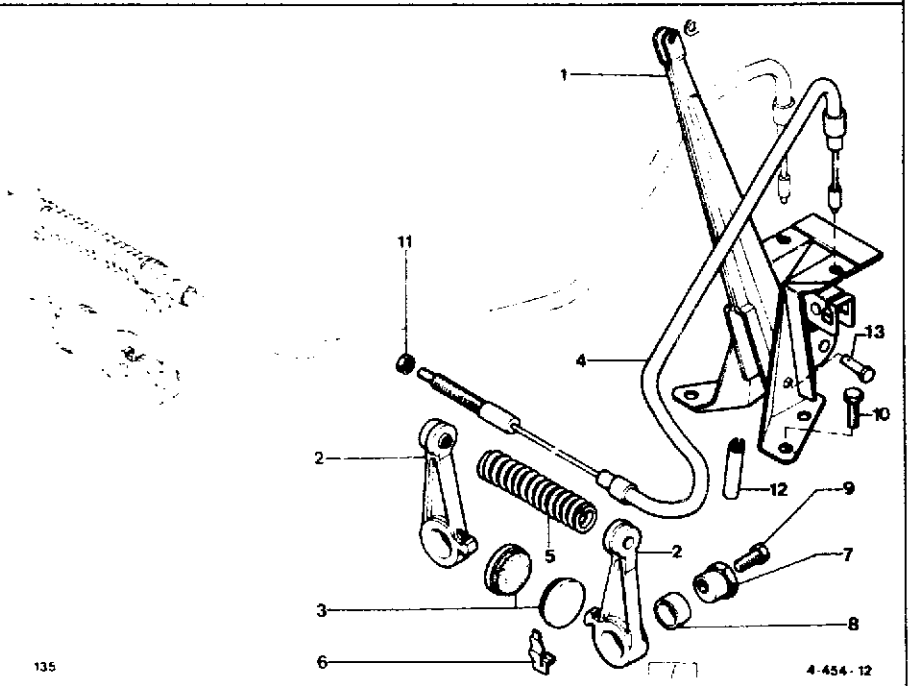

I	NUMEROS		K	7/77 ▶	DESIGNATIONS
				D A D	**PIECES SPÉCIALES** SPEZIALTEILE SPECIAL PARTS PIEZAS ESPECIALES PEZZI PSECIALI
4	4AY	75 491 847	1	1o - G	**CABLE** ZUG CABLE CABLE CAVO
	4AY	*75 491 849*	1	2o - G - NFP	—

137

4-454-20

E-07

LIMITEUR DE FREIN ARRIERE
HINTERBREMSBEGRENZER
REAR BRAKE LIMITER
LIMITADOR DE FRENOS TRASEROS
LIMITATORE FRENI POSTERIORI

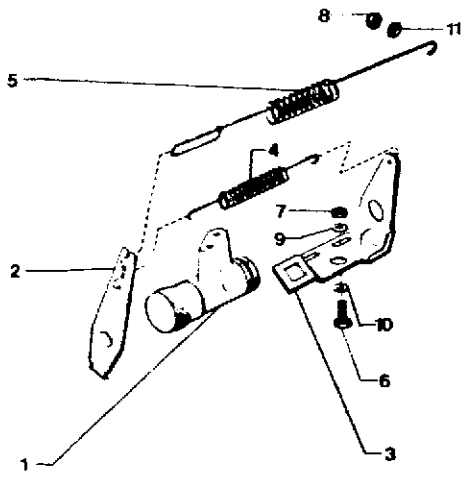

135

4-454-20

I	NUMEROS		K	4 x 4 12/79 ▶10/81	DESIGNATIONS
1	4CA	5 436 616	1	MIN	**LIMITEUR COMPLET** BREMSBEGRENZER BRAKE LIMITER LIMITADOR LIMITATORE
2	4CA	75 436 615	1		**LEVIER DE COMMANDE** BETAETIGUNGSHEBEL CONTROL LEVER PALANCA DE MANDO LEVA DI COMANDO
3	4CA	5 411 919	1	NFP	**SUPPORT** TRAEGER BRACKET SOPORTE SUPPORTO
4	4CA	5 411 924	1		**RESSORT TARAGE** TARIERFEDER SPING MUELLE MOLLA
5	4CA	95 547 183	1		**RESSORT COMPENSATEUR** AUSGLEICHSFEDER COMPENSATING SPRING MUELLE COMPENSADOR MOLLA COMPENSATRICE
6	9CA	79 03 201 012	2	TH 5 x 16	**VIS** SCHRAUBE SCREW TORNILLO VITE
7	9CA	*25 327 019*	2	HE 5 x 0,80 NFP	**ÉCROU** MUTTER NUT TUERCA DADO
8	9TT	*77 03 034 008* RP 79 03 034 070	1	HE 6 x 1,00	–
9	9AA	79 03 058 027	2	5 x 12 x 1	**RONDELLE** SCHEIBE WASHER ARANDELA RONDELLA
10	9TT	22 770 069	2	5 x 12 x 1	–
11	1MA	79 03 053 028	1	6 x 12 x 1	–

137

4-454-20-A

E-06

LIMITEUR DE FREIN ARRIERE
HINT. BREMSBEGRENZER
REAR BRAKE LIMITER
LIMITADOR DE FRENO TRAS.
LIMITATORE FRENO POST.

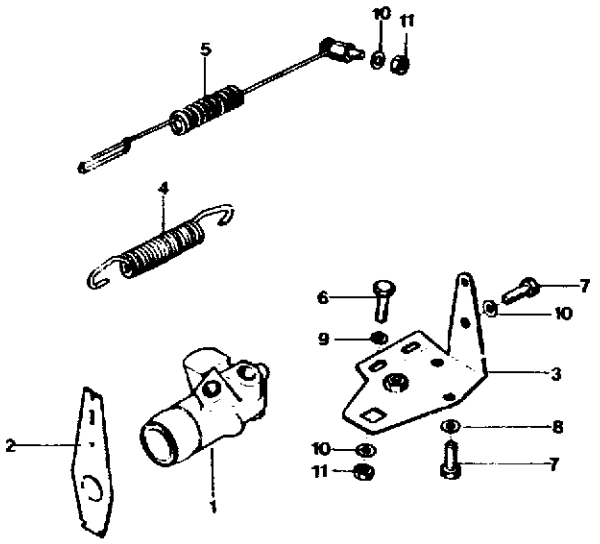

135

4 - 454 - 20A

I	NUMEROS		K	4 x 4 10/81▶	DESIGNATIONS
1	4CA	95 564 836	1	MIN	**LIMITEUR COMPLET** KOMPLETTER BEGRENZER COMPLETE LIMITER LIMITADOR COMPL. LIMITATORE COMPL.
2	4AM	75 436 615	1		**LEVIER DE COMMANDE** BETAETIGUNGSHEBEL CONTROL LEVER PALANCA LEVA
3	4CA	95 544 439	1		**SUPPORT** TRAEGER BRACKET SOPORTE SUPPORTO
4	4CA	95 549 742	1	ϕ EXT 12,6	**RESSORT TARAGE** TARIERFEDER SPRING MUELLE MOLLA
5	4CA	95 564 837 RP 95 539 762	1	ϕ EXT 16	**RESSORT AVEC AXE** FEDER M. ACHSE SPRING WITH PIN MUELLE CON EJE MOLLA CON PERNO
6	1UT	79 03 201 020	2	TH 6 x 14	**VIS** SCHRAUBE SCREW TORNILLO VITE
7	9CD	*77 03 001 120*	2	TH 6 x 16 - NFP	–
8	90A	22 770 069	2	5,5 x 12 x 1	**RONDELLE** SCHEIBE WASHER ARANDELA RONDELLA
9	9TT	79 03 058 028	3	ϕ 6 x 14	–
10	7TA	79 03 053 028	3	ϕ6 x 12	–
11	9TT	*77 03 034 008* RP 79 03 034 070	2	NYLSTOP - 6 x 1,00	**ÉCROU** MUTTER NUT TUERCA DADO

E05

ICI FIN DU GROUPE
HIER IST DAS ENDE DER GRUPPE
HERE IS THE END OF GROUPE
AQUI ES EL FIN DEL GRUPO
QUI E LA FINE DEL GRUPPO

4

GROUPE
GRUPPE
GROUPE
GRUPO
GRUPPO

5

VOIR VUE
SIEHE BILD
SEE PICTURE
VER VISTA
VEDERE VEDUTA

F01

137

5–512–10

F–05 ↑

ÉQUIPEMENT ÉLECTRIQUE
ELEKTRISCHE AUSRUESTUNG
ELECTRIC EQUIPMENT
EQUIPO ELECTRICO
EQUIPAGGIAMENTO ELETTRICO

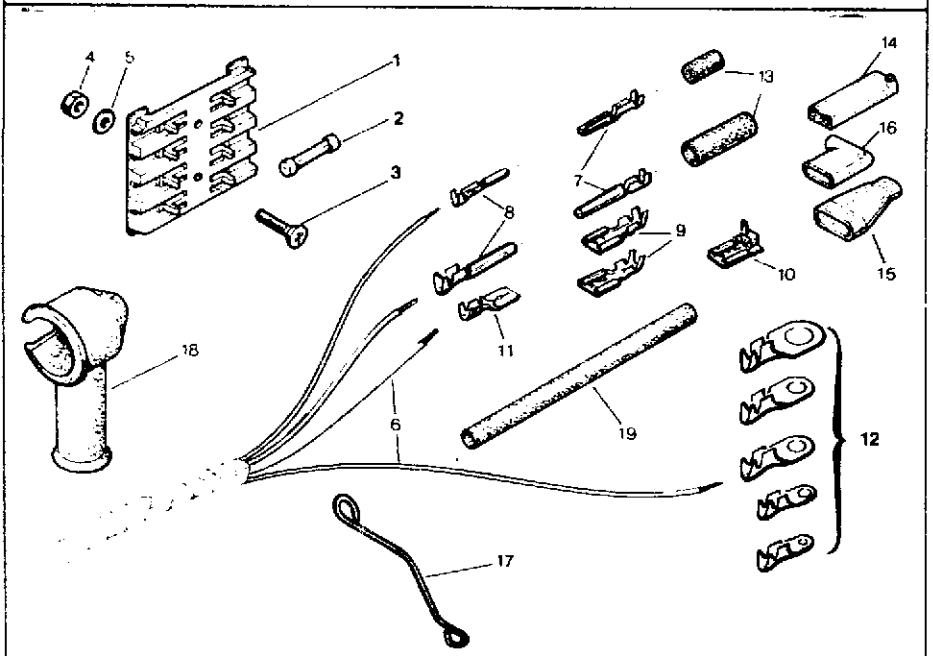

135

5 - 512 - 10

I	NUMEROS		K		DESIGNATIONS
1	5AM	AM 523 6 8	1		**SUPPORT 4 FUSIBLES**
			2	XT 9/74 ▶	SICHERUNGSKASTEN (4 SICH.) FOUR-FUSE BRACKET SOPORTE PARA 4 FUSIBLES SUPPORTO 4 FUSIBILI
2	5DA	75 415 527	4	16 A - «RKG» ▶ 9/74	**FUSIBLE**
			1	9/74 ▶	SICHERUNG FUSE FUSIBLE FUSIBILE
	5TT	95 493 639	1	16 A - «TEXTON»	—
	5DA	75 415 528	3	10 A «RKG» 9/74 ▶	—
	5TT	95 493 196	3	10 A «TEXTON»	—

I	NUMEROS		K		DESIGNATIONS
3	9TT	79 03 005 072	2	TFB 5 x 20	**VIS** SCHRAUBE SCREW TORNILLO VITE
4	9TT	79 03 032 006	2	HE 5 x 0,80	**ÉCROU** MUTTER NUT TUERCA DADO
5	9AA	79 03 058 027	2	COϕ5,1 x 12,2	**RONDELLE** SCHEIBE WASHER ARANDELA RONDELLA
6	5TT	ZC 9 003 732 U	?	20/10	**CABLE 1 CONDUCT. (AU METRE)** KABEL. EINADRIG (PRO METER) ONE-CORE CABLE (BY THE M.) CABLE 1 CONDUC. (POR METRO) CAVO 1 CONDUTT. (A METRI)
	5TT	ZC 9 003 733 U	?	12/10	**CABLE 2 CONDUCT. (AU METRE)** KABEL, ZWEIADRIG (PRO METER) TWO-CORE CABLE (BY THE M.) CABLE 2 CONDUC. (POR METRO) CAVO 2 CONDUTT. (A METRI)
7	3AA	AZ 512 3	?	ϕ 3	**FICHE FEMELLE** STECKBUECHSE SOCKET CLAVIJA HEMBRA SPINA FEMMINA
	5AM	5 420 487	?	ϕ 4	—
8	5AA	AZ 512 4	?	ϕ 3	**FICHE MALE** STECKER PLUG CLAVIJA SPINA
	5AA	5 412 276	?	ϕ 4	—
9	5DA	5 412 142	?	ϕ 6,35	**CLIP** QUETSCH-HUELSE FEMALE CLIP CLIP HEMBRA GRAFFETTA FEMMINA
	5DA	DX 511 99	?	ϕ 6,35	—
10	5CD	5 407 093	?	ϕ 6,35	**CLIP FEMELLE** QUETSCH-HUELSE FEMALE CLIP CLIP HEMBRA GRAFFETTA FEMMINA
	5TT	95 544 487	?	ϕ 6,35	**– VERROUILLABLE** – VERSPERRBAR – LOCKING – CERRADERO – BLOCCABILE
	5TT	95 544 487	?	ϕ 6,35 - 1/80 ▶	**– D'ALTERNATEUR** – F. LIMA – F. ALTERNATORE – DE ALTERNADOR – DELL'ALTERNATORE
11	5DA	5 412 143	?	ϕ 6,35 - LON 8	**CLIP MALE** FLACHSTECKER MALE CLIP CLIP MACHO GRAFFETTA MASCHA

137 **TABLEAU DES VUES** 09/91 **GROUPE**
AUFSTELLUNG DER BILDER GROUP
TABLE OF PICTURE GROUP **5**
-02 ↑ TABLA DE VISTAS GRUPO
TABELLA DELLE VEDUTE GRUPPO

SOUS-GROUPE UNTERGRUPPE SUBGROUP SUBGRUPO SOTTOGRUPPO	NUMÉRO NUMMER NUMBER NUMERO NUMERO	VUE BILD PICTURE VISTA VEDUTA
ABLERIES ERKABELUNG IRING ACES DE CABLES ASCI ELETTRICI	5-511-10	F03 F04
QUIPEMENT ELECTRIQUE LEKTRISCHE AUSRUESTUNG ECTRICAL EQUIPMENT QUIPO ELECTRICO QUIPAGGIAMENTO ELETTRICO	5-512-10	F05 F06 F07
OFFRET DE LAMPES — LAMPES LIEHBIRNEN UND SAETZE LUBS AND SETS AMPARAS Y JUEGO AMPADE E SERIE	5-512-20	F08
ABLEAU DE BORD RMATUERENBRETT STRUMENT PANEL ABLERO DE ABORDO UADRO STRUMENTAZIONE ▶ 9/74	5-521-10	F09
9/74 ▶ 7/78	5-521-10A	F10
4 × 2 7/78 ▶	5-521-11	F11
4 × 4	5-521-12	F12
ABLEAU DE BORD - ACCESSOIRES RMATURENBRETT - ZUBEHOER STRUMENT PANEL - ACCESSORIES ABLERO ABORDO - ACCESORIOS UADRO STRUMENT - ACCESSORI ▶ 9/74	5-522-10	F13 F14 F15
9/74 ▶	5-522-10A	G15 G14

INTERRUPTEURS SCHALTER SWITCHES INTERRUPTORES INTERRUTTORI — ▶ 7/78	5-522-20	G13
— 7/78 ▶	5-522-20A	G12
BATTERIE - SUPPORT - CABLES BATTERIE UND TRAEGER - KABEL BATTERY AND BRACKET - CABLES BATERIA Y SOPORTE - CABLES BATTERIA E SUPPORTO - CAVI —	5-531-10	G11
ARMEE	5-531-20	G10
PHARES - COMMANDE DE PHARES PLAFONNIER SCHEINWERFER UND EINSTELLBET. INNENLEUCHTE HEADLAMPS AND CONTROL - CEILING LIGHT FAROS Y MANDO-LUZ DEL TECHO FARI E COMANDO - PLAFONIERA —	5-541-10	G09 G08
FEUX INDICATEURS AVANT - CENTRALE CLIGNOTANTE VORDERE BLINKER - BLINKGEBER FRONT INDICATOR LIGHTS - FLASHER UNIT LUCES INDICADORAS DELANTERAS CAJA DE DESTELLO FANALINI INDICATORI ANTERIORI LAMPEGGIATORE — ▶ 7/77	5-541-20	G07 G06
FEU INDICATEUR AVANT VORDERE BLINKER FRONT INDICATOR LIGHT LUZ INDICADORA DELANTERA FANALINO INDICATORE ANT. — 7/77 ▶	5-541-20A	G05
ECLAIRAGE AVANT VORDERE BELEUCHTUNG FRONT LIGHTING ALUMBRADO DEL ILLUMINAZIONE ANT. — (USA) ▶ 1/72	5-541-30	G04
ECLAIRAGE ARRIERE HINTERE BELEUCHTUNG REAR LIGHTING ALUMBRADO TRAS. ILLUMINAZIONE POST. —	5-544-10	G03 G02
— (USA) ▶ 1/72	5-544-20	G01

ESSUIE-GLACE SCHEIBENWISCHER WINDSCREEN WIPER LIMPIA-PARABRISAS TERGICRISTALLO — «SEV-MARCHAL»	5-561-10	H01 H02
LAVE-GLACE SCHEIBENWASCHANLAGE WINDSCREEN WASHER LAVA-PARABRISAS LAVACRISTALLO — «STOP» ▶ 9/94	5-564-10	H03
— ELECTRIQUE 9/74 ▶	5-564-10A	H04
— (USA) ▶ 1/72	5-564-20	H05
AVERTISSEUR SIGNALHORN HORN BOCINA AVVERTITORE —	5-571-10	H06
— EQUIPEMENT RADIO - ARMEE	5-653-10	H07

CABLERIES
KABELBUENDEL
WIRING
HACES DE CABLES
FASCI ELETTRICI

I	NUMEROS		K		DESIGNATIONS
					CABLERIE KABELBUENDEL WIRING HAZ DE CABLES FASCI ELETTRICO
				– AV –	
	5AY	*AY 511 9 X*	1	NFP ▶12/71	–
	5CA	5 417 853	1	12/71 ▶9/74	–
	5CA	*5 457 414*	1	NFP 9/74 ▶ 7/76	–
	5CA	*5 486 507*	1	NFP 7/76 ▶ 7/78	–
	5CA	75 522 708 - **NFP**	1	4 x 2 7/78 ▶ 6/81	–
	5CA	95 564 159	1	6/81 ▶	–
	5CA	95 541 704	1	4 x 4 ▶ 6/81	–
	5CA	95 564 181	1	4 x 4 6/81 ▶	–
				– AR –	
	5AY	*AY 511 3 B*	1	NFP ▶ 6/69	–
	5AY	*AY 511 212 A*	1	NFP 9/69 ▶ 9/74	–
	5CA	*5 463 596*	1	NFP 9/74 ▶ 7/76	–
	5CA	*5 486 517*	1	4 x 2 - NFP 7/76 ▶	–
	5CA	*95 542 436*	1	4 x 4 - NFP	–
	5CA	5 449 572	1	4 x 2	**– DE PLAQUE ARRIERE** – F. HINT. NUMMERNSCHILD – F. NUMBER PLATE – DE PLACA MATRICULA – PER PORTATARGA POST.
	5CA	*95 548 726*	1	4 x 4 - NFP	**– MASSE FEUX ARRIERE** – Z. MASSE F. HINT. LEUCHTEN – F. EARTHING THE LIGHTS – MASA LUCES TRAS. – MASSA FANALINI POST.
	5CA	95 542 437 **NFP**	1	4 x 4	**– DE TABLEAU DE BORD** – F. ARMATURENBRETT – F. INSTRUMENT PANEL – DE TABLERO ABORDO – PER QUADRO STRUMENTAZIONE
	5CA	*95 548 727*	1	4 x 4 - NFP	**– DE COMPTEUR D'HEURES** – F. STUNDENANZEIGER – F. HOUR COUNTER – DE CUENTA HORAS – PER CONTATTORE

			ARMÉE	
				PIECES SPÉCIALES
5CA	*5 416 333*	1	NFP ▶ 9/74	**CABLERIE AVANT**
5CA	*5 457 415*	1	NFP 9/74 ▶ 7/76	–
5CA	5 486 509	1	7/76 ▶ 6/81	–
5CA	95 564 161	1	6/81 ▶	–
				CABLES
5CA	5 416 335	1	LON 700	**– POSITIF ALTERNATEUR A DÉMARREUR**
5CA	5 416 336	1	LON 2675	**– ALIMENTATION BOITE DE RADIO**
5CA	5 416 337	1	LON 320	**– DE DÉMARREUR A POSITIF BATTERIE**
5CA	5 416 338	1	LON 400	**– DE JONCTION ENTRE BATTERIE**
5CA	5 416 339	1	LON 400	**– DU NÉGATIF AU COUPE-BATTERIE**
1DA	*26 142 179*	15	LON 112 - NFP XT	**COLLIER**
				PIECES SPÉCIALES SPEZIALTEILE SPECIAL PARTS PIEZAS ESPECIALES PEZZI SPECIALI
				CABLERIES KABELBUENDEL WIRING HAZ DE CABLES FASCIO ELETTRICO
			– AV –	
5AY	*AY 511 214 A*	1	(USA) - NFP ▶12/71	–
5CA	*5 418 156*	1	(USA) - NFP 12/71 ▶ 1/72	–
5CA	5 417 853	1	(CH) 7/72 ▶9/74	–
5CA	*5 463 767*	1	NFP 9/74 ▶7/76	–
5CA	*5 386 607*		NFP 7/76 ▶	–
5CA	*5 486 511*	1	(I) - NFP 7/76 ▶7/78	–
5CA	*75 522 710*	1	(I) - NFP 7/78 ▶6/81	–
5CA	*95 564 160*	1	(I) - NFP 6/81 ▶	–
			– AR –	
5AY	AY 511 212 A	1	(CH) 7/72 ▶9/74	–
5CA	*5 463 596*	1	NFP 9/74 ▶7/76	–
5CA	*5 486 517*	1	NFP 7/76 ▶	–
5CA	*5 489 143*	1	(B) - NFP 7/76 ▶	–
5CA	*5 463 768*	1	NFP 9/74 ▶	**– DE FEUX DE DÉTRESSE** – F. WARNBLINKANLAGE – F. DISTRESS SIGNAL – DE SENAL DE PELIGRO – PER SEGNALE PERICOLO
5CA	*5 463 770*	1	(I) - NFP 9/74 ▶	**– DE CLIGNOTANTS LATÉRAUX** – F. SEITLICHE BLINKER – F. LATERAL INDICATOR – DE INDICADORES LAT. – PER FANALINI LATERALI

CABLERIES (Suite)
KABELBUENDEL (Forts.)
WIRING (Cont.)
HACES DE CABLES (Cont.)
FASCI ELETTRICI (Cont.)

I	NUMEROS		K		DESIGNATIONS
				XT	**PIECES SPÉCIALES (Suite)** SPEZIALTEILE (Forts.) SPECIAL PARTS (Cont.) PIEZAS ESPECIALES (Cont.) PEZZI SPECIALI (Cont.)
					FAISCEAU SATZ KABEL SET OF LEADS HAZ DE CABLES CAVETTO
					– **DE NIVOCODE** – KABELBUENDEL F. ST-ANZ. – WIRING F. LEVER INDICATOR – HAZ DE NIVOCODE – FASCIO NIVOCODE
	5CA	*5 423 403*	1	(CH) - NFP 7/72 ▶ 9/74	–
	5CA	*5 463 771*	1	NFP 9/74 ▶	–
	5CA	*5 477 886*	1	(NL) (B) - NFP	–
	5CD	*75 515 969*	1	(I) (E) - NFP 2/78 ▶	–
					FEU BROUILLARD HINTERE NEBELLEUCHTE REAR FOG LAMP LUZ TRAS. DE NIEBLA FANALINO POST. DI NEBBIA
	5AZ	5 486 253	1	(B) ▶ 7/76	– **FAISCEAU TABLEAU BORD** – KABELBUENDEL IM A-BRETT – DASHBOARD WIRING – HAZ DE TABLERO – FASCIO QUADRO
	5AS	*5 486 255*	1	(B) - LON 3880 RMP - NFP ▶ 7/76	– **FAISCEAU AR** – HINTERES KABELBUENDEL – REAR WIRING – HAZ TRAS. – FASCIO POST.
	5CA	*75 528 435*	1	(B) - NFP 7/78 ▶	–
	5CA	5 489 148	1	(B) 7/76 ▶ 7/78	–

137

5–512–10

F–05

ÉQUIPEMENT ÉLECTRIQUE
ELEKTRISCHE AUSRUESTUNG
ELECTRIC EQUIPMENT
EQUIPO ELECTRICO
EQUIPAGGIAMENTO ELETTRICO

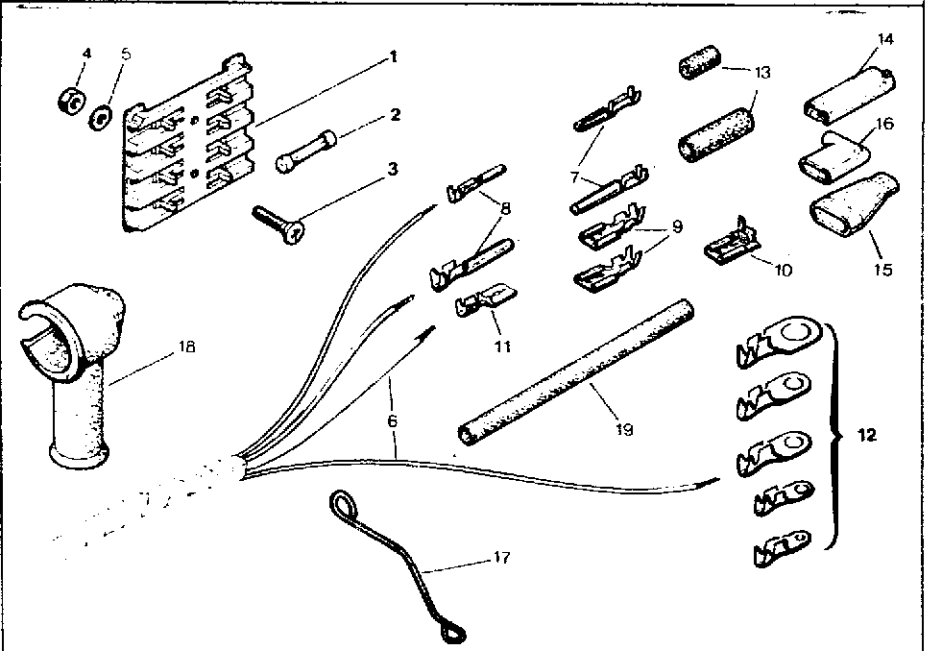

135

5 - 512 - 10

I	NUMEROS		K		DESIGNATIONS
1	5AM	AM 523 6 B	1		**SUPPORT 4 FUSIBLES**
			2	XT 9/74 ▶	SICHERUNGSKASTEN (4 SICH.)
					FOUR-FUSE BRACKET
					SOPORTE PARA 4 FUSIBLES
					SUPPORTO 4 FUSIBILI
2	5DA	75 415 527	4	16 A - «RKG» ▶9/74	**FUSIBLE**
			1	9/74 ▶	SICHERUNG
					FUSE
					FUSIBLE
					FUSIBILE
	5TT	95 493 639	1	16 A - «TEXTON»	—
	5DA	75 415 528	3	10 A «RKG» 9/74 ▶	—
	5TT	95 493 196	3	10 A «TEXTON»	—

3	9TT	79 03 005 072	2	TFB 5 x 20	**VIS**
					SCHRAUBE
					SCREW
					TORNILLO
					VITE
4	9TT	79 03 032 006	2	HE 5 x 0,80	**ÉCROU**
					MUTTER
					NUT
					TUERCA
					DADO
5	9AA	79 03 058 027	2	COϕ5,1 x 12,2	**RONDELLE**
					SCHEIBE
					WASHER
					ARANDELA
					RONDELLA
6	5TT	ZC 9 003 732 U	?	20/10	**CABLE 1 CONDUCT. (AU METRE)**
					KABEL. EINADRIG (PRO METER)
					ONE-CORE CABLE (BY THE M.)
					CABLE 1 CONDUC. (POR METRO)
					CAVO 1 CONDUTT. (A METRI)
	5TT	ZC 9 003 733 U	?	12/10	**CABLE 2 CONDUCT. (AU METRE)**
					KABEL, ZWEIADRIG (PRO METER)
					TWO-CORE CABLE (BY THE M.)
					CABLE 2 CONDUC. (POR METRO)
					CAVO 2 CONDUTT. (A METRI)
7	3AA	AZ 512 3	?	ϕ 3	**FICHE FEMELLE**
					STECKBUECHSE
					SOCKET
					CLAVIJA HEMBRA
					SPINA FEMMINA
	5AM	5 420 487	?	ϕ 4	—
8	5AA	AZ 512 4	?	ϕ 3	**FICHE MALE**
					STECKER
					PLUG
					CLAVIJA
					SPINA
	5AA	5 412 276	?	ϕ 4	—
9	5DA	5 412 142	?	ϕ 6,35	**CLIP**
					QUETSCH-HUELSE
					FEMALE CLIP
					CLIP HEMBRA
					GRAFFETTA FEMMINA
	5DA	DX 511 99	?	ϕ 6,35	—
10	5CD	5 407 093	?	ϕ 6,35	**CLIP FEMELLE**
					QUETSCH-HUELSE
					FEMALE CLIP
					CLIP HEMBRA
					GRAFFETTA FEMMINA
	5TT	95 544 487	?	ϕ 6,35	— **VERROUILLABLE**
					— VERSPERRBAR
					— LOCKING
					— CERRADERO
					— BLOCCABILE
	5TT	95 544 487	?	ϕ 6,35 - 1/80 ▶	— **D'ALTERNATEUR**
					— F. LIMA
					— F. ALTERNATORE
					— DE ALTERNADOR
					— DELL'ALTERNATORE
11	5DA	5 412 143	?	ϕ 6,35 - LON 8	**CLIP MALE**
					FLACHSTECKER
					MALE CLIP
					CLIP MACHO
					GRAFFETTA MASCHA

ÉQUIPEMENT ÉLECTRIQUE (Suite)
ELEKTRISCHE AUSRUESTUNG (Forts.)
ELECTRIC EQUIPMENT (Cont.)
EQUIPO ELECTRICO (Cont.)
EQUIPAGGIAMENTO ELETTRICO (Cont.)

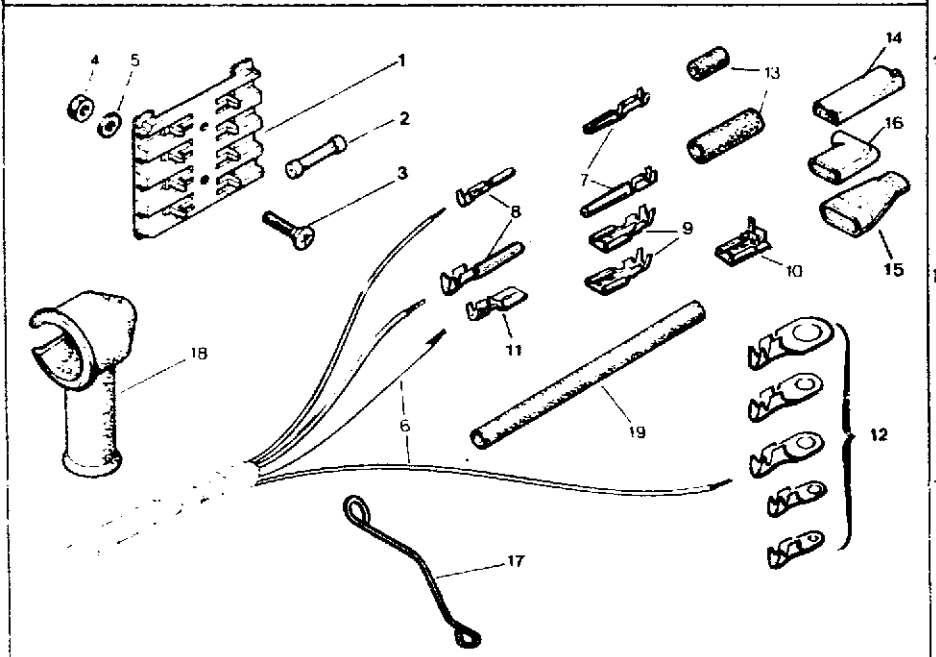

I	NUMEROS		K		DESIGNATIONS
12	5TT	ZC 9 614 540 U	?	φ 3,25	**COSSE** KABELSCHUH CABLE TERMINAL TERMINAL DE CABLE CAPOCORDA
	5TT	ZC 9 614 541 U	?	φ 4,5	–
	5TT	*ZC 9 614 542 U* RP 26 145 429	?	φ 5,5	–
	5TT	ZC 9 614 543 U	?	φ 6,25 - **NFP**	–
	5TT	*ZC 9 614 544 U* RP 26 145 449	?	φ 8,5	–
13	5AA	*AZ 512 5* RP 75 528 522	?	CC - 3 x 6 x 12	**BAGUE** HUELSE BUSH CASQUILLO BOCCOLA
	5AM	5 420 488	?	3,5 x 6,5 x 20 ENS	– **100 EMBOUTS DE 10 COULEURS** 100 KAPPEN VON 10 FARBEN 100 CAPS OF 10 COLOURS 100 ES TREMOS DE 10 COLORES 100 ESTREMITA DI 10 COLORI
14	5DA	DX 511 151 A	?		**– POUR COSSE ET FICHE** – F. KABELSCHUHE U. STECKER – F. CABLE TERMIN. AND PLUGS – DE TERMINALES Y CLAVIJAS – PER CAPOCORDA E SPINE
	5TT	5 465 935	?		**– POUR CLIP FEMELLE** – F. QUETSCH-HUELSEN – F. FEMALE CLIPS – PARA CLIPS HEMBRAS – PER GRAFFETTE FEMMINE
15				ENS	**90 EMBOUTS DE 9 COULEURS** 90 KAPPEN VON 9 FARBEN 90 CAPS OF 9 COLOURS 90 ESTREMOS DE 9 COLORES 90 ESTREMITA DI 9 COLORI
	5AA	5 457 472	?		**– POUR CLIP MALE DE 6,35** – F. FLACHSTECKER – F. MALE CLIPS – PARA CLIPS MACHOS – PER GRAFFETTE MASCHIE
16				ENS	**40 EMBOUTS DE 4 COULEURS** 40 KAPPEN VON 4 FARBEN 40 CAPS OF 4 COLOURS 40 ESTREMOS DE 4 COLORES 40 ESTREMITA DI 4 COLORI
	5AA	*5 457 471*	?	NFP	**– POUR CLIP FEMELLE DRAPEAU DE 6,35** – F. SPEZIAL-QUETSCH-HUELSEN – F. SPECIAL FEMALE CLIPS – PARA CLIPS HEMBRAS SPEC. – PER GRAFFETTE FEM. SPEC.
17	5AY	AYB 511 97	1	φ 4	**PATTE DE CABLERIE** LASCHE F. KABELBUENDEL WIRING LUG PATA DE HAZ DE CABLES STAFFA PER FASCIO ELETTR.
18	5AY	75 420 472	1	CC	**PROTECTEUR** GUMMISCHUTZKAPPE RUBBER PROTECTOR PROTECTOR DE CAUCHO PROTTETTORE DI GOMMA
	5CA	*5 489 490*	1	φ 17 - LON 32 - NFP	**GAINE VINYLE NOIRE** SCHWARZE VINYLE-HUELLE BLACK VINYLE SHEATH VAINA VINYLE NEGRA GUAINA VINILE NERA

ÉQUIPEMENT ÉLECTRIQUE (Suite)
ELEKTRISCHE AUSRUESTUNG (Forts.)
ELECTRIC EQUIPMENT (Cont.)
EQUIPO ELECTRICO (Cont.)
EQUIPAGGIAMENTO ELETTRICO (Cont.)

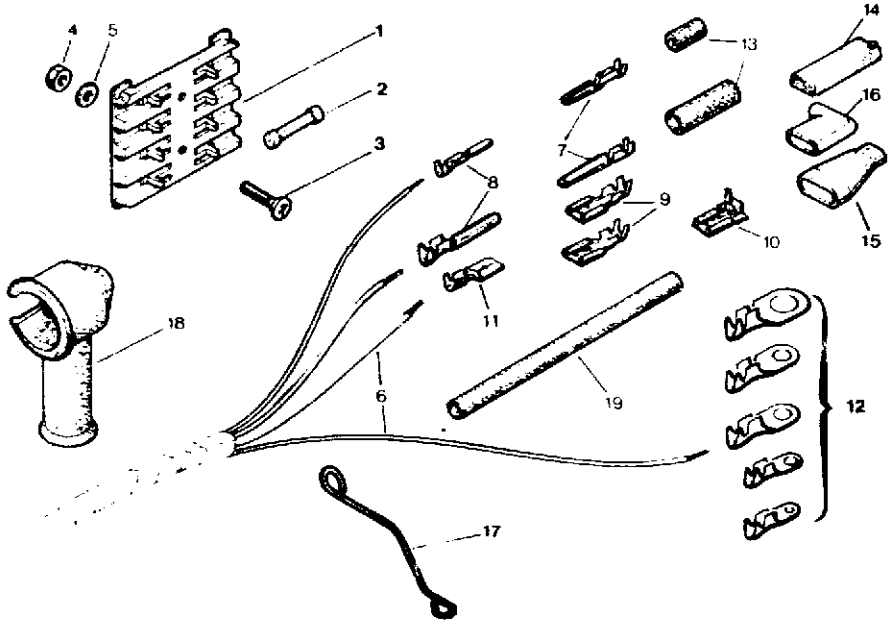

I	NUMEROS		K		DESIGNATIONS
	5TT	7903 097 996	?	Ø 1	**CONNECTEUR SUR APPAREILS** VERBINDUNG AN APPARATEN CONNECTOR ON APPARATUS CONECTADOR SOBRE APARATOS CONNETTORE SU APPARECCHI
	5TT	7903 097 997	?	Ø 5	–

				XT		PIÈCES SPÉCIALES SPEZIALTEILE SPECIAL PARTS PIEZAS ESPECIALES PEZZI SPECIALI
2	5DA	75 415 527	5	16A	9/74 ▶	**FUSIBLE** SICHERUNG FUSE FUSIBLE FUSIBILE
	5DA	75 415 528	3	10A	9/74 ▶	– **ÉTIQUETTES «PIÈCES DE RECHANGE»** WARNAUFKLEBER F. ERSATZTEILE WARNING LABEL F. SPARE PARTS ROTULO DE ADVERTENCIA PARA PIEZAS DE RECAMBIO BOTTELLO D'AVVERTENZA PER PEZZI DI RICAMBIO
	5AA	5 486 988	1	RMP	11/76 ▶	**– UNIVERSELLE** – 5-SPRACHIG – IN 5 LANGUAGES – EN 5 LENGUAS – IN 5 LINGUE
	5AA	*5 490 399*	1	1° «SEIMA» - NFP	10/74 ▶	**TRIANGLE PRÉSIGNALISATION** WARNDREIECK WARNING TRIANGLE TRIANGULO PRESENALAMIENTO TRIANGULA PRESEGNALAZIONE
	5AA	*5 490 421*	1	2° «COCORDAN» - NFP LAFONT»	10/74 ▶	–
	5AY	75 421 304	1	CC-38 x 13 x 25	7/76 ▶	**BAGUE** HUELSE BUSCH CASQUILLO BOCCOLA

COFFRET DE LAMPES – LAMPES
GLUEHBIRNEN UND SAETZE
BULBS AND SETS
LAMPARAS Y JUEGOS
LAMPADE E SERIE

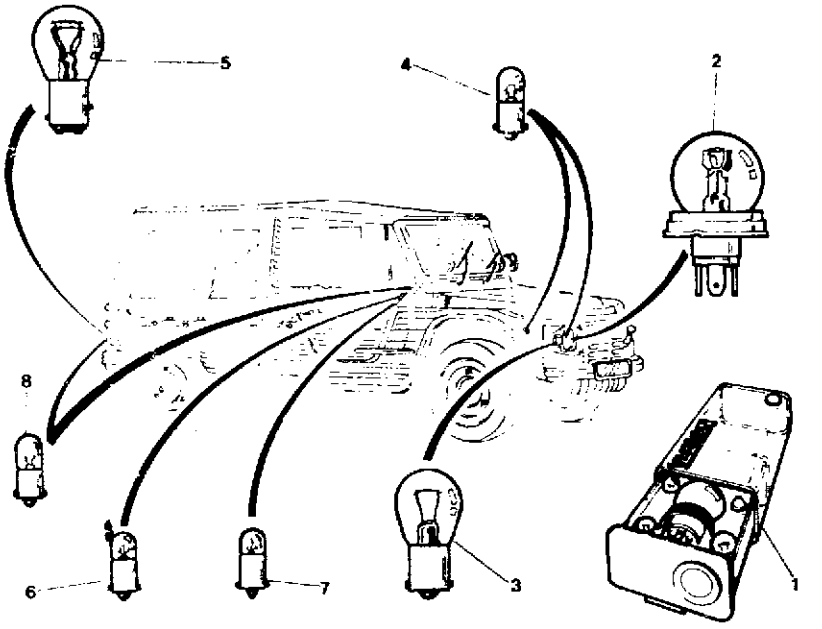

135 5-512-20

1	NUMEROS		K		DESIGNATIONS
1	5GX	ZC 9 858 348 U NFP	1	«NORMA» C 161	**COFFRET** SATZ SET JUEGO SERIE
2	5TT	26 109 009	2	12 V - 45/40 W «NORMA»	**LAMPE JAUNE** GLUEHBIRNE, BELB BULB, YELLOW LAMPARA AMARILLA LAMPADA GIALLA
	5TT	26 109 009	2	12 V - 45/40 W	–
3	5C.[illegible]	25 920 009	2	12 V - 15 W ▶6/69	**LAMPE** GLUEHBIRNE BULB LAMPARA LAMPADA
	5AM	25 926 009	2	12 V - 21 W 6/69 ▶	–
4	5GX	25 908 009		12 V - 4 W	–
	5AM	25 919 009	2	12 V - 5 W ▶6/69	–
5	5AM	25 928 00[illegible]	2	12 V - 21/5 W 6/69 ▶	–
6	5GX	25 907 069 - NFP	1	12 V - 2 W	–
7	5AU	25 910 009		12 V - 1,5 W ▶9/74	–
	5GX	25 909 009		24 V - 4 W 9/74 ▶	–
				ARMÉE	**PIECES SPECIALES**
	5CA	26 103 009	1	24 V - 2 W	**– DE TABLEAU**
	5CA	26 104 009	2	24 V - 21/5 W	**– DE POSITION ET STOP**
	5CA	26 105 009	2	24 V - 21 W	**– DE DIRECTION**
	5CA	26 106 009	2	24 V - 55/50 W	**– DE PHARE**
	5GX	25 909 009	1	24 V - 4 W	**– D'ÉCLAIREUR**
	5VD	26 146 869	1	24 V - 3 W	**– DE VOLTMETRE**
	5CA	79 03 097 330	1	24 V - 2 W XT	**– DE TIRETTE DE STARTER** **PIECES SPECIALES** SPEZIALTEILE SPECIAL PARTS PIEZAS ESPECIALES PEZZI SPECIALI
1	5AM	ZC 9 858 106 U NFP	1	«NORMA» C 912	**COFFRET** SATZ SET JUEGO SERIE
2	5AA	26 108 009	2	12 V - 45/50 W «NORMA»	**– DE PHARE (BLANCHE)** – F. SCHEINWERFER (WEISS) – F. HEADLAMP (WHITE) – DE FARO (BLANCO) – PER FARO (BIANCA)
	5TT	ZC 9 865 190 U-NFP	2	12 V-40/45 W «ISKRA»	–
3	5DA	*25 929 009* RP 25 928 009	2	12 V - 21/5 W (USA) ▶1/72	**LAMPE** GLUEHBIRNE BULB LAMPARA LAMPADA
8	5DA	25 922 909	2	12 V - 6 W (CH) 10/73 ▶	–
	5DA	*25 922 009*	2	12 V - 15 W (USA)-NFP ▶1/72	–

TABLEAU DE BORD
ARMATURENBRETT
INSTRUMENT PANEL
TABLERO ABORDO
QUADRO STRUMENTAZIONE

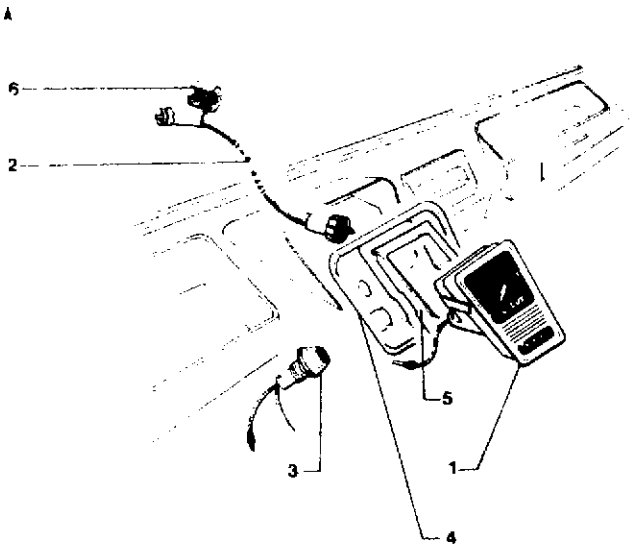

135 5-521-10

I	NUMEROS		K	▶ 9/74	DESIGNATIONS
1	5CA	5 414 284	1	«O.S.»	**TABLEAU DE BORD (120 KM)** ARMATURENBRETT (120 KM) INSTRUMENT PANEL (120 KM) TABLERO ABORDO (120 KM) QUADRO STRUMENT. (120 KM)
	5CA	*5 414 285*	1	«O.S.» - NFP	**TABLEAU DE BORD - EN MILES** ARM.-BRETT (MEILENEINTEIL.) INSTR. PANEL, IN MILES TABLERO ABORDO EN MILLAS QUADRO STRUMENTAZ. IN MIGLIA

2	5AK	AK 521 3 B	1	LON 750		**FLEXIBLE DE COMPTEUR** TACHOSPIRALE FLEXIBLE DRIVE FLEXIBLE DE TABLERO FLESSIBILE DEL QUADRO
3	5AZ	5 427 286	2		2/70 ▶	**VOYANT ROUGE** ROTE KONTROLLEUCHTE RED TELL-TALE PILOTO ROJO SPIA ROSSO
4	5AA	AZ 521 01 B NFP	1		▶ 2/70	**SUPPORT NU DU TABLEAU** TRAEGER F. ARM.-BRETT SUPPORT PANEL, ONLY SOPORTE DESNUDO DE TABLERO SUPPORTO NUDO PER QUADRO
	5AK	AK 521 281 A	1	NFP	2/70 ▶	—
5	5AA	AZ 521 20	1			**SEMELLE DE TABLEAU** HALTERAHMEN F. ARM.-BRETT SECURING SURROUND F. PANEL QUADRO SOPORTE TABLERO TELAIETTO FISSAGGIO QUADRO
6	5AZ	5 413 895	1	9 x 21 x 30		**BAGUE DE FLEXIBLE** HUELSE F. TACHOSPIRALE FLEXIBLE DRIVE BUSH CASQUILLO DEL FLEXIBLE BOCCOLA PER FLESSIBILE
				ARMÉE		**PIECES SPÉCIALES**
1	5CA	5 415 800	1	24 V		**TABLEAU DE BORD**
	5CA	5 418 492 NFP	1	«JAEGER» 24 V		**VOLTMETRE**
4	5CA	*5 418 167*	1	NFP		**SUPPORT DE TABLEAU**
				XT		**PIECES SPÉCIALES** SPEZIALTEILE SPECIAL PARTS PIEZAS ESPECIALES PEZZI SPECIALI
1	5AK	*AK 521 08*	1	(USA)- NFP	▶ 6/71	**TABLEAU DE BORD EN MILES** ARM.-BRETT (MEILENEINTEIL.) INSTRUM. PANEL, IN MILES TABLERO ABORDO EN MILLAS QUADRO STRUMENT. IN MIGLIA
3	5AA	*AZ 541 04 C*	1	NFP		**VOYANT DE PHARE (BLEU)** BLAUE KONTROLLEUCHTE BLUE TELL-TALE LUZ TESTIGO AZUL DE FARO SPIA BLU PER FARO
		AM 575 98 B	1	NFP		**VOYANT DE CLIGNOTANT VERT** GRUENE KONTROLLEUCHTE GREEN TELL-TALE LUZ TESTIGO VERDE SPIA VERDE PER INDICATORE
4		*AZ 521 99 D*	1	(USA) NFP	▶ 2/70	**SUPPORT NU DE TABLEAU** TRAEGER F. ARMATURENBRETT SUPPORT PANEL, ONLY SOPORTE DESNUDO DE TABLERO SUPPORTO PER QUADRO
		AZ 521 99 B	1	NFP - (I)	▶ 2/70	—
	5AK	AK 521 281 A NFP	1		2/70 ▶	—

137

5-521-10-A

F-10

TABLEAU DE BORD
ARMATURENBRETT
INSTRUMENT PANEL
TABLERO ABORDO
QUADRO STRUMENTAZIONI

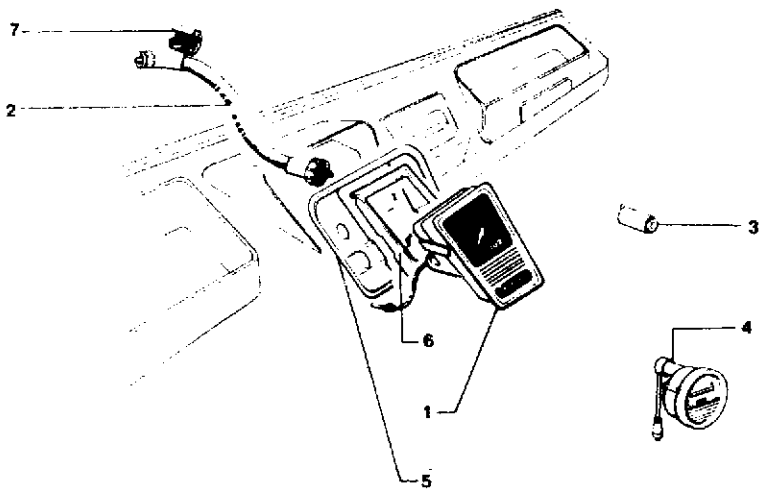

135 5-521-10 A

I	NUMEROS		K	9/74 ▶ 7/78	DESIGNATIONS
1	5CA	5 414 284	1	«OS»	**TABLEAU DE BORD (120 KM)** ARMATURENBRETT (120 KM) INSTRUMENT PANEL (120 KM) TABLERO ABORDO (120 KM) QUADRO STRUMENT. (120 KM)
	5CA	*5 414 285*	1	«OS» - NFP	**TABLEAU DE BORD EN MILES** ARM.-BRETT (MEILENEINTEIL) INSTRUM. PANEL, IN MILES TABLERO ABORDO EN MILLAS QUADRO STRUMENT. IN MIGLIA

2	5AK	AK 521 3 B	1	LON 750 - RMP		**FLEXIBLE DE COMPTEUR** TACHOSPIRALE FLEXIBLE DRIVE FLEXIBLE DE TABLERO FLESSIBILE DEL QUADRO
3	5GX	GX 41 404 01 A	4			**VOYANT ROUGE** ROTE KONTROLLEUCHTE RED TELL-TALE LUZ TESTIGO ROJA SPIA ROSSO
4	5CA	5 490 481	1	RMP	4/75 ▶	**VOLTMETRE** VOLTMETER VOLTMETER VOLTIMETRO VOLTAMETRO
5	5CA	*5 460 386 * 152*	1	RMP - NFP	▶ 7/76	**SUPPORT DE TABLEAU** TRAEGER F. ARMATURENBRETT SUPPORT PANEL, ONLY SOPORTE DESNUDO DE TABLERO SUPPORTO NUDO PER QUADRO
	5CA	*5 460 386 * 700*	1	NFP	7/76 ▶	–
6	5CA	*5 460 385*	1	NFP	▶ 7/76	**SEMELLE DE TABLEAU** HALTERAHMEN F. ARM.-BRETT SECURING SURROUND F. PANEL QUADRO SOPORTE DE TABLERO TELAIETTO FISSAGGIO QUADRO
	5AA	AZ 521 20	1		7/76 ▶	–
7	5AA	5 413 895	1	9 x 21 x 30		**BAGUE DE FLEXIBLE** HUELSE F. TACHOSPIRALE FLEXIBLE DRIVE BUSH CASQUILLO DEL FLEXIBLE BOCCOLA PER FLESSIBILE
				ARMÉE		**PIECES SPÉCIALES**
1	5CA	5 415 800	1	24 V		**TABLEAU DE BORD**
	5CA	5 490 482	1	«JAEGER» 24 V RMP	7/75 ▶	**VOLTMETRE**
				XT		**PIECES SPÉCIALES** SPEZIALTEILE SPECIAL PARTS PIEZAS ESPECIALES PEZZI SPECIALI
3						**VOYANT** KONTROLLEUCHTE TELL-TALE LUZ TESTIGO SPIA
	5GX	GX 41 335 01 A	1	(B)		**– DE BROUILLARD ORANGE** – ORANGE F. NEBELLEUCHTE – ORANGE F. FOG LAMP – ANARAJ. LUZ DE NIEBLA – ARANCIONE FANAL. NEBBIA
5	5CA	*5 460 388*	1	NFP	▶ 7/76	**SUPPORT NU DE TABLEAU** TRAEGER F. ARMATURENBRETT SUPPORT PANEL, ONLY SOPORTE DESNUDO DE TABLERO SUPPORTO NUDO PER QUADRO

137

5-521-11

F-11 ↑

TABLEAU DE BORD
ARMATURENBRETT
INSTRUMENT PANEL
TABLERO ABORDO
QUADRO STRUMENTAZIONI

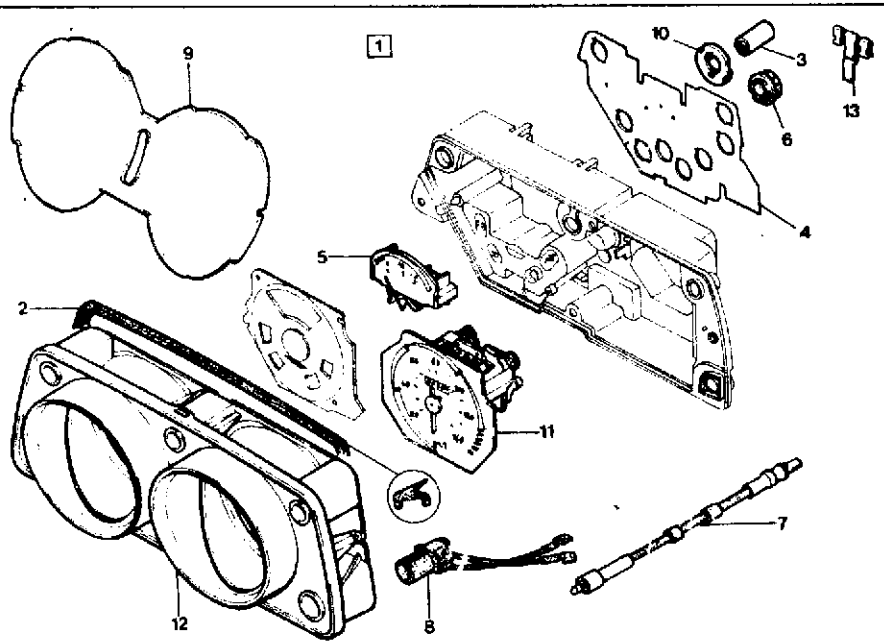

1	NUMEROS		K	4 x 2 7/78 ▶	DESIGNATIONS
1	5CA	95 634 933	1	«JAEGER» 3229 ▶	**TABLEAU DE BORD** ARMATURENBRETT INSTRUMENT PANEL TABLERO ABORDO QUADRO STRUMENTAZIONE
2	5CA	75 523 430	1	C C	**JOINT D'ÉTANCHÉITÉ** DICHTUNG SEAL JUNTA GUARNIZIONE TENUTA
3	5CA	*75 492 296*	1	NFP	**VOLTMETRE VOYANT ELECTRONIQUE** VOLTMETER VOLTMETER VOLTIMETRO VOLTAMETRO
4	5RB	95 534 919	1		**CIRCUIT IMPRIMÉ** GEDRUCKTER STROMKREIS PRINTED CIRCUIT CIRCUITO IMPRESO CIRCUITO STAMPATO
5	5RB	5 508 015	1		**INDICATEUR ESSENCE** KRAFTSTOFFANZEIGER FUEL GAUGE INDICADOR DE GASOLINA INDICATORE BENZINA
6	5DX	OX 95 212 99 A	8		**DOUILLE DE LAMPE** LAMPENFASSUNG BULB HOLDER PORTALAMPARA PORTALAMPADA
7	5AA	AK 521 3 B	1		**FLEXIBLE DE COMPTEUR** TACHOSPIRALE FLEXIBLE DRIVE FLEXIBLE VELOCIMETRO FLESSIBILE TACHIMETRO
8	5RB	75 531 740	1		**PORTE-LAMPE** LAMPENHALTER BULB HOLDER PORTALAMPARA PORTALAMPADA
9	5CA	75 531 741 NFP	1		**VITRE DE TABLEAU** GLASSCHEIBE GLASS CRISTAL CRISTALLO
10	5CA	95 532 751	1		**ADAPTAT. POUR V.V..E.** ANPASS-STUECK F. VOLTMETER VOLTMETER ADAPTER ADAPTADOR VOLTIMETRO ADATTATORE VOLTAMETRO
11	5CA	75 528 554	1		**COMPTEUR** TACHOMETER SPEEDOMETER VELOCIMETRO TACHIMETRO
12	5CA	*75 528 553*	1	NFP	**FAÇADE TABLEAU** VORDERRAHMEN F. ARM-BRETT INST. PANEL FRONT FRAME FACHADA TABLERO ABORDO FACCIATA QUADRO STR.
13	5CA	75 523 317	2		**AGRAFE TABLEAU** KLAMMER F. ARMATURENBRETT INSTRUMENT PANEL CLIP GRAPA DEL TABLERO GRAFFETTA QUADRO STRUM.

137

5-521-12

F-12

TABLEAU DE BORD
ARMATURENBRETT
INSTRUMENT PANEL
TABLERO ABORDO
QUADRO STRUMENTAZIONE

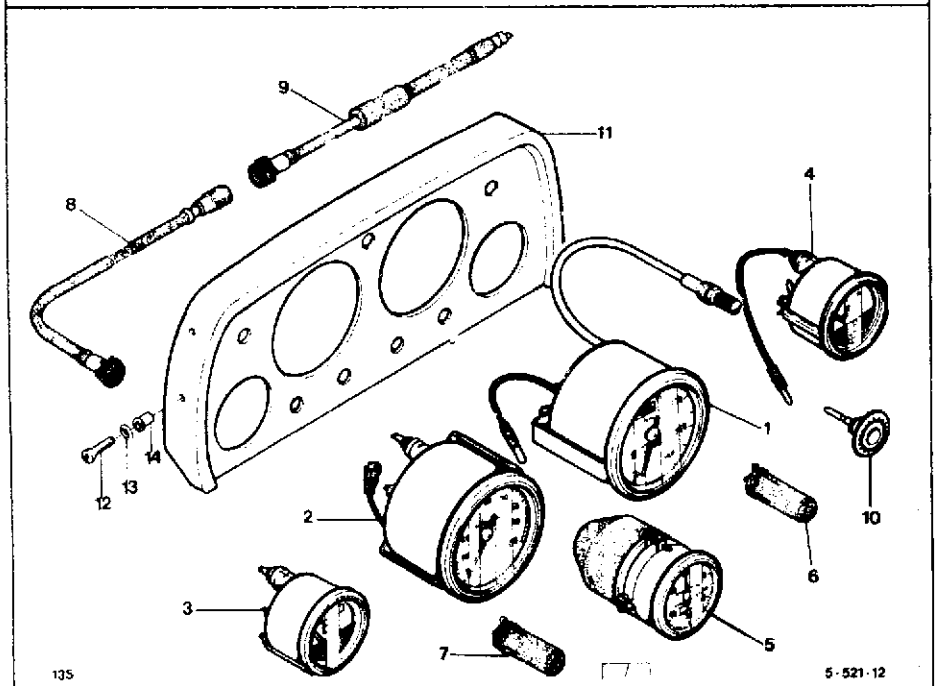

I	NUMEROS		K	4 x 4	DESIGNATIONS
1	5FF	95 494 248 **NFP**	1	1/81 ►	**COMPTEUR** TACHOMETER SPEEDOMETER VELOCIMETRO TACHIMETRO
2	5FF	*95 492 960*	1	NFP	**COMPTE-TOURS** DREHZAHLMESSER REVOLUTION COUNTER CUENTARREVOLUCIONES CONTAGIRI
3	5FF	ZC 9 875 412 U **NFP**	1		**VOLTMETRE** VOLTMETER VOLTMETER VOLTIMETRO VOLTOMETRO
4	5FF	95 492 963 **NFP**	1		**INDICATEUR ESSENCE** KRAFTSTOFFANZEIGER FUEL GAUGE INDICADOR DE GASOLINA INDICATORE BENZINA
5	5FF	95 492 964	1		**COMPTEUR D'HEURES** STUNDENANZEIGER HOUR COUNTER CUENTAHORAS CONTAORE
6	5GX	GX 51 335 01 A **NFP**	4		**VOYANT JAUNE** GELBE KONTROLLEUCHTE YELLOW WARNING LIGHT PILOTO ARMARILLO SPIA GIALLO
7	5GX	GX 41 404 01 A	1		**VOYANT ROUGE** ROTE KONTROLLEUCHTE RED WARNING LIGHT PILOTO ROJO SPIA ROSSO
8	5RB	5 491 577	1		**FLEXIBLE** TACHOSPIRALE FLEXIBLE DRIVE FLEXIBLE FLESSIBILE
9	5RB	5 491 160	1		–
10	5DA	5 427 391	1		**PRISE DE COURANT** STECKDOSE PLUG SOCKET TOMA DE CORRIENTE PRESA DI CORRENTE
11	5CA	*95 538 524 * 400*	1	NFP	**PLAQUE SUPPORT** HALTEPLATTE SUPPORT PLATE PLACA SOPORTE PLACCA SUPPORTO
	5CA	*95 538 524 * 405*	1	NFP	–
	5CA	95 538 524 * 508	1		–
	5CA	*95 538 524 * 524*	1	NFP	–
	5CA	*95 538 524 * 824*	1	NFP	–
12	9RB	24 701 009	4	TR 4 x 16	**VIS** SCHRAUBE SCREW TORNILLO VITE
13	9BF	26 195 059	4	ϕ 4	**RONDELLE CUVETTE** NAPFSCHEIBE CUP WASHER ARANDELA CUBETA RONDELLA SCODELLINO
14	5CA	79 03 043 024	4	SERT 4 x 0,70	**ÉCROU** MUTTER NUT TUERCA DADO

137

5–522–10

F–13

TABLEAU DE BORD – ACCESSOIRES
ARMATURENBRETT – ZUBEHOER
INSTRUMENT PANEL – ACCESSORIES
TABLERO ABORDO – ACCESORIOS
QUADRO STRUMENTAZIONE – ACCESSORI

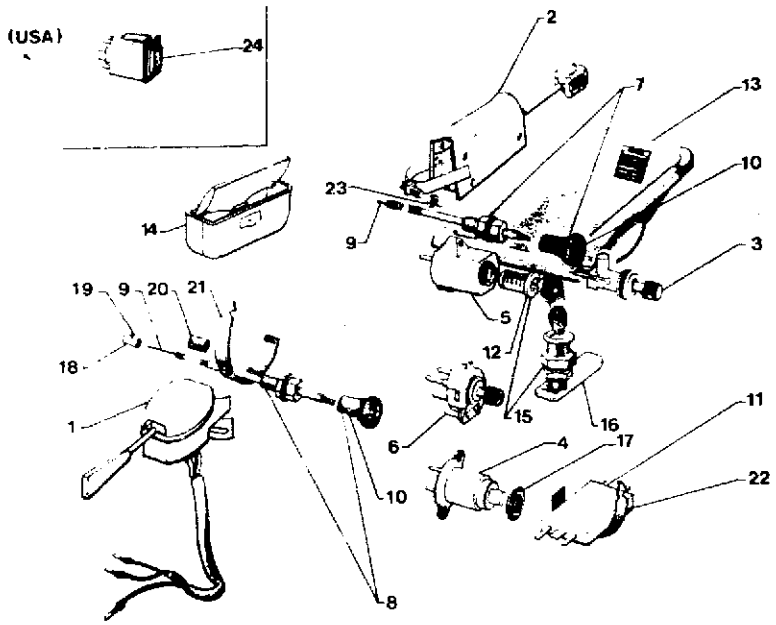

135 5-52 240

I	NUMEROS		K	▶ 9/74	DESIGNATIONS
1	5A	5 403 435 NFP	1	«GELBON»	**COMMUTATEUR DE :** SCHALTER FUER : SWITCH FOR : CONMUTADOR DE : COMMUTATORE PER : – **DIRECTION** – BLINKER – DIRECTION INDICATOR – DIRECCION – DIREZIONE

2	5AM	*AZ 522 02 B* RP HY 522 01 B	1			– **ÉCLAIRAGE ET AVERTISSEUR** – BELEUCHTUNG UND HORN – LIGHTING AND HORN – ALUMBRADO Y BOCINA – ILLUMINAZIONE E AVVERT.
3	5AZ	5 427 285	1			– **ESSUIE-GLACE** – SCHEIBENWISCHER – WINDSCREEN WIPER – LIMPIAPARABRISAS – TERGICRISTALLO
4	5CA	AY 522 273 A	1			– **DÉMARREUR** – ANLASSER – STARTER – ARRANQUE – AVVIAMENTO
5	5AA	AZU 212 14			▶ 6/69	– **ALLUMAGE (SANS BARILLET)** – ZUNDSCHLOSS O. EINSATZ – IGNITION (WITHOUT BARREL) – ENCENDIDO (SIN BARRILETE) – ACCENSIONE (SENZA BARILET.)
	5CA	5 401 726 NFP	1		9/69 ▶	–
6	5AM	*AZ 522 9 B*	1	NFP		– **STATIONNEMENT** – PARKLIGHT – PARKING LIGHT – LUZ ESTACIONAMIENTO – LUCE DI SOSTA
						TIRETTE DE : BETAETIGUNGSZUG FUER : CONTROL FOR : TIRADOR DE : TIRANTE PER :
7	5AY	75 519 265	1	RMP	▶ 12/71	– **DÉMARREUR** – ANLASSER – STARTER MOTOR – ARRANQUE – AVVIAMENTO
8		*AY 225 2 I*	1	LON 1015 NFP	▶ 12/71	– **STARTER** – STARTER – CHOKE – STARTER – STARTER
	5AY	*5 418 345* RP GX 41 245 01 C	1	LON 1000	12/71	–
9	5AM	AY 525 120 A	1	LON 800	▶ 12/71	**CABLE TIRETTE DÉMARREUR** ANLASSERZUG STARTER CONTROL CABLE MANDO DE ARRANQUE CAVO COMANDO AVVIAMENTO
	5GX	GX 41 275 02 A	1	LON 1050		**CABLE TIRETTE STARTER** STARTERZUG CHOKE CONTROL CABLE MANDO DE STARTER CAVO COMANDO STARTER
10	5AY	AY 525 82	1		▶ 12/71	**BOUTON DÉMARREUR** KNOPF F. ANLASSERZUG STARTER CONTROL KNOB BOTON DE ARRANQUE POMELLO AVVIAMENTO

TABLEAU DE BORD – ACCESSOIRES (Suite)
ARMATURENBRETT – ZUBEHOER (Forts.)
INSTRUMENT PANEL – ACCESSORIES (Cont.)
TABLERO ABORDO – ACCESORIOS (Cont.)
QUADRO STRUMENTAZIONI – ACCESSORI (Cont.)

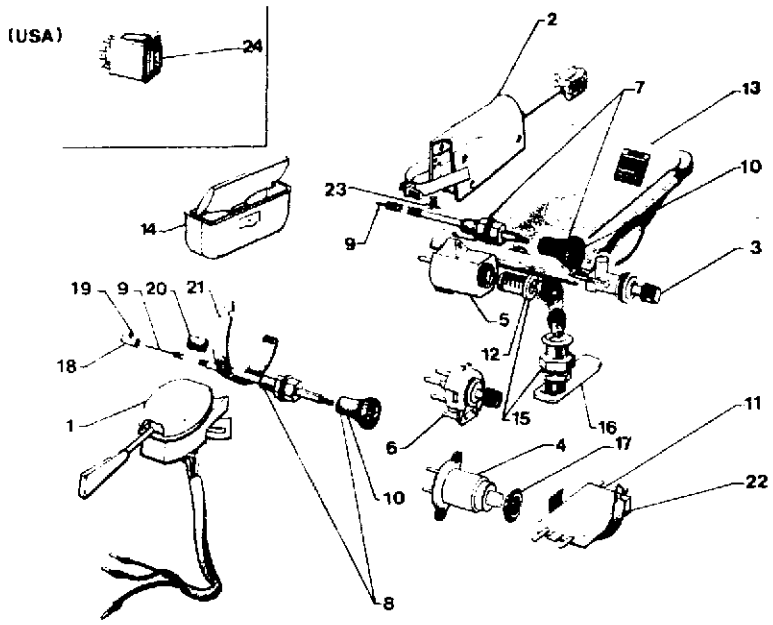

135 5-52240

I	NUMEROS		K	▶9/74	DESIGNATIONS
10	5AY	*AY 525 82 A* RP GX 41 241 01 A	1		**BOUTON STARTER** KNOPF F. STARTERZUG CHOKE CONTROL KNOB BOTON DE STARTER POMELLO STARTER
11	5AY	*AY 614 176 A*	1	«DUCELLIER» - NFP	**RELAIS DE VOYANT** RELAIS F. KONTROLLEUCHTE TELL-TALE RELAY RELE DE LUZ TESTIGO RELE PER SPIA
12	5AA	A 861 43	1		**BARILLET** ZUENDSCHLOSSEINSATZ BARREL BARRILETE BARILETTO
13	5AY	AY 651 202 A NFP	1	«201»	**BOITE A GANTS** HANDSCHUHKASTEN MAP BOX CAJA PARA GUANTES VANO RIPOSTIGLIO
	5AY	*AY 651 203 A*	1	«405» - NFP	–
	5AY	*AY 651 204 A*	1	«808» - NFP	–
	5AY	*AY 651 205 A*	1	«508» - NFP	–
14	5AY	AY 652 1	1		**CENDRIER** ASCHENBECHER ASHTRAY CENICERO PORTACENERE
15	5AY	*AY 861 311 B* RP 5 414 443	1		**SERRURE BOITE A GANTS** SCHLOSS F. HANDSCHUHKAS MAP BOX LOCK CERRADURA DE CAJA SERRATURA PER RIPOSTIGLIO
16	5AY	AY 861 323 A	1		**PENE** VERRIEGELUNGSSTUECK LOCKING PIECE PESTILLO STANGHETTA
17	5CA	*5 417 993*	1	NFP 12/71 ▶	**COLLERETTE** RING RING COLLARIN COLLARINO
18	5AA	75 413 304	1		**BARILLET SERRE-CABLE** SEILKLEMMSTUECK CABLE TRUNNION BARRILETE APRIETA-CABLE MORSETTO SERRACAVO
19	5AA	5 419 954	1		**VIS DE BARILLET** SC AUBE F. KLEMMSTUECK TRUNNION SCREW TORNILLO DE APRIETA CABLE VITE PER MORSETTO
20	5DA	75 416 426	2	4 x 15 x 20	**BAGUE DE TIRETTE** ZUGHUELSE CABLE BUSH CASQUILLO DE TIRADOR BOCCOLA PER TIRANTE
21	3DA	*5 427 913* RP 26 142 289	1		**COLLIER DE TIRETTE** ZUGSCHELLE CONTROL CLAMP COLLAR DE TIRADOR FASCETTA PER TIRANTE
22	5AM	26 142 199	1		**COLLIER DE RELAIS** SCHELLE F. RELAIS RELAY CLAMP COLLAR DE RELE FASCETTA PER RELE
23	7DA	5 413 594	1	ϕ 5 x 0,80	**ECROU** MUTTER NUT TUERCA DADO

TABLEAU DE BORD – ACCESSOIRES (Suite)
ARMATURENBRETT – ZUBEHOER (Forts.)
INSTRUMENT PANEL – ACCESSORIES (Cont.)
TABLERO ABORDO – ACCESORIOS (Cont.)
QUADRO STRUMENTAZIONE – ACCESSORI (Cont.)

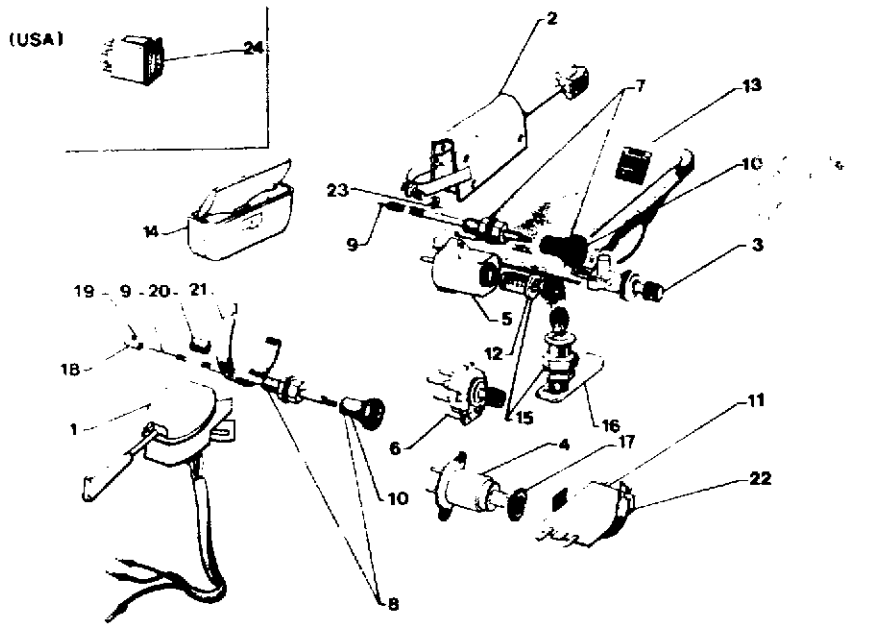

135 5-52 240

I	NUMEROS		K	▶9/74	DESIGNATIONS
				ARMÉE	**PIECES SPÉCIALES**
					COMMUTATEUR DE :
1	5CA	5 416 330	1		**– DIRECTION**
4	5CA	AY 522 273 A	1		**– DÉMARREUR**
5	5CA	5 417 994	1		**– ALLUMAGE**
17	5CA	*5 417 993*	1	16 x 100 - NFP	**COLLERETTE DÉMARREUR**
	5CA	*5 417 995*	1	20 x 100 - NFP	**COLLERETTE D'ALLUMEUR**

				(USA) ▶1/72	**PIECES SPÉCIALES**
					SPEZIALTEILE
					SPECIAL PARTS
					PIEZAS ESPECIALES
					PEZZI SPECIALI
				«GELBON»	**COMMUTATEUR DE :**
					SCHALTER FUER :
					SWITCH FOR :
					CONMUTADOR DE :
					COMMUTATORE PER:
1	5AY	*AY 522 010 A*	1	NFP	**– DIRECTION**
					– BLINKER
					– DIRECTION INDICATOR
					– DIRECCION
					– DIREZIONE
3	5AY	*AY 522 43*	1	NFP	**– ESSUIE-GLACE**
					– SCHEIBENWISCHER
					– WINDOW WIPER
					– LIMPIA-PARABRISAS
					– TERGICRISTALLO
4	5AY	AY 522 273 A	1		**– LAVE-GLACE**
					– SCHEIBENWASCHANLAGE
					– WINDSCREEN WASHER
					– LAVA-PARABRISAS
					– LAVACRISTALLO
24	5DA	DX 522 222 A	1		**– SIGNAL DE DÉTRESSE**
					– WARNBLINKANLAGE
					– DANGER WARNING SIGNAL
					– SENAL DE PELIGRO
					– SEGNALE PERICOLO

137

5-522-10-A

G-15

TABLEAU DE BORD – ACCESSOIRES
ARMATURENBRETT – ZUBEHOER
INSTRUMENT PANEL – ACCESSORIES
TABLERO ABORDO – ACCESORIOS
QUADRO STRUMENTAZIONI – ACCESSORI

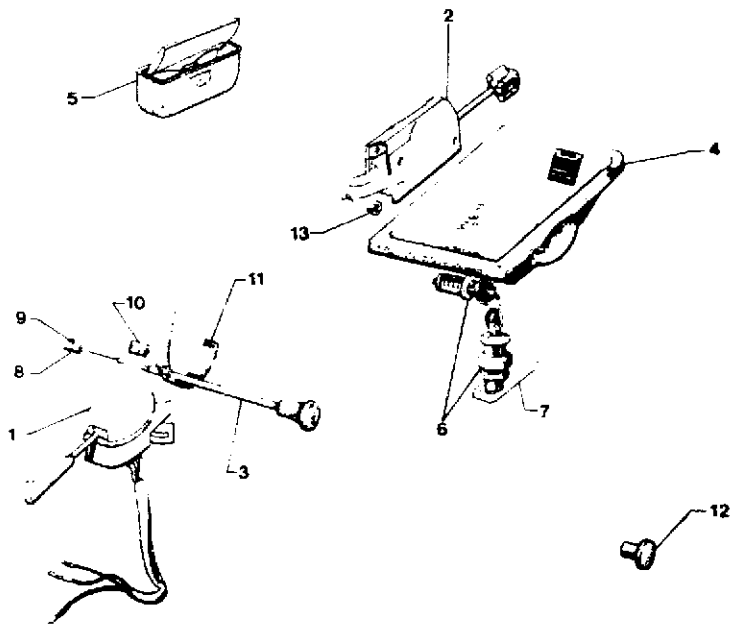

I	NUMEROS		K	9/74 ▶	DESIGNATIONS
					COMMUTATEUR DE : SCHALTER : SWITCH : CONMUTADOR : COMMUTATORE :
1	5AZ	5 442 153	1	«CARTIER» ▶7/76	**– DIRECTION** – F. BLINKER – F. DIRECTION INDICATOR – DE DIRECCION – DIREZIONE
	5HA	5 403 436	1	«GELBON» 7/76 ▶	–
2	5AZ	5 442 154 NFP	1	▶7/76	– ÉCLAIRAGE – AVERTISSEUR – F. BELEUCHTUNG UND HORN – F. LIGHTING AND HORN – DE ALUMBRADO Y BOCINA – ILLUMINAZIONE AVVERTITORE
	5CA	HY 522 01 B	1	7/76 ▶	–
3	5MA	95 597 848	1	«SEIM» 6/81 ▶	**TIRETTE DE STARTER** STARTERZUG CHOKE CONTROL TIRADOR DE STARTER TIRANTE STARTER
	5CA	75 492 416	1	7/78 ▶6/81	–
4	5CA	5 476 361 * 201 NFP	1	4 x 2	**BOITE A GANTS** HANDSCHUHKASTEN MAP BOX CAJA PARA GUANTES VANO RIPOSTIGLIO
	5CA	5 476 361 * 811	1	«AZUR»	–
	5CA	*5 476 361 * 400*	1	NFP ▶7/79	–
	5CA	5 476 361 * 405	1	4 x 2	–
	5CA	*5 476 361 * 409*	1	4 x 2 - NFP	–
	5CA	*5 476 361 * 808*	1	NFP ▶7/77	–
	5CA	5 476 361 * 824	1	4 x 2 7/77 ▶	–
	5CA	*5 476 361 * 524* RP 5 476 361 * 824	1	4 x 2 7/79 ▶	–
	5CA	*95 540 239 * 405*	1	4 x 4 - NFP	–
	5CA	*95 540 239 * 524*	1	4 x 4 - NFP	–
	5CA	*95 540 239 * 508*	1	4 x 4 - NFP	–
	5CA	*95 540 239 * 824*	1	4 x 4 - NFP	–
5	5AY	AY 652 1	1		**CENDRIER** ASCHENBECHER ASHTRAY CENICERO PORTACENERE
6	7CA	*5 414 444* RP 5 414 443	1	▶6/76	**SERRURE BOITE A GANTS** SCHLOSS F. HANDSCHUHKAST. MAP BOX LOCK CERRADURA DE CAJA SERRATURA DEL RIPOSTIGLIO
	7CA	5 491 210	1	6/76 ▶	–
7	5AY	AY 861 323 A	1	4 x 2	**PENE** VERRIEGELUNGSSTUECK LOCKING PIECE PESTILLO STANGHETTO
	5CA	*95 540 240*	1	4 x 4 - NFP	–
8	5AA	75 413 304	1		**BARILLET SERRE-CABLE** SEILKLEMMSTUECK CABLE TRUNNION BARRILETE APRIETA-CABLE MORSETTO SERRACAVO
9	5AA	5 419 954	1		**VIS DE BARILLET** SCHRAUBE F. KLEMMSTUECK TRUNNION SCREW TORNILLO APRIETA-CABLE VITE SERRACAVO

137

5-522-10-A

G-14 ↓

TABLEAU DE BORD – ACCESSOIRES (Suite)
ARMATURENBRETT – ZUBEHOER (Forts.)
INSTRUMENT PANEL – ACCESSORIES (Cont.)
TABLERO ABORDO – ACCESORIOS (Cont.)
QUADRO STRUMENTAZIONI – ACCESSORI (Cont.)

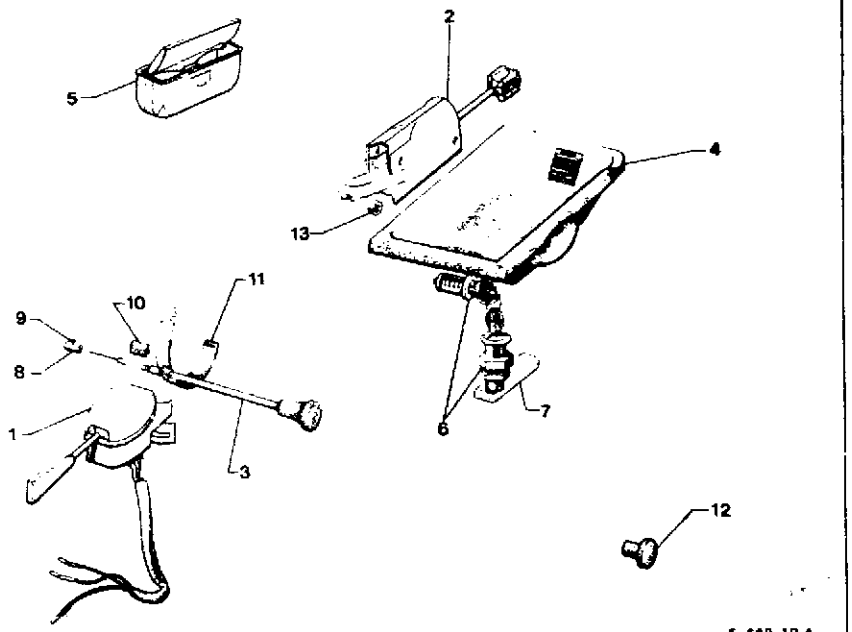

135

5-522-10 A

I	NUMEROS		K	9/74 ▶	DESIGNATIONS
10	5DA	75 416 426	2	4 x 15 x 20	**BAGUE DE TIRETTE** ZUGHUELSE CABLE-BUSH CASQUILLO DE TIRADOR BOCCOLA PER TIRANTE
11	5DA	*5 427 913* RP 26 142 289	1		**COLLIER DE TIRETTE** ZUGSCHELLE CONTROL CLAMP COLLAR DE TIRADOR FASCETTA PER TIRANTE
12	7AY	5 442 512 NFP	?		**OBTURATEUR DE VOYANT** STOPFEN F. K-LEUCHTE PLUG F. TELL-TALE OBTURADOR DE ESPIA OTTURATORE SPIA
13	7DA	5 413 594	1	ϕ 5 x 0,80	**ÉCROU** MUTTER NUT TUERCA DADO
				ARMÉE	**PIECES SPÉCIALES**
					COMMUTATEUR DE
1	5CA	5 416 330 NFP	1	«SEIMA» ▶3/77	– **DIRECTION**
	5AA	5 491 415	1	«SEIMA» 3/77 ▶	–
3	5CA	95 495 045	1	6/81 ▶	**TIRETTE DE STARTER**

INTERRUPTEURS
SCHALTER
SWITCHES
INTERRUPTORES
INTERRUTTORI

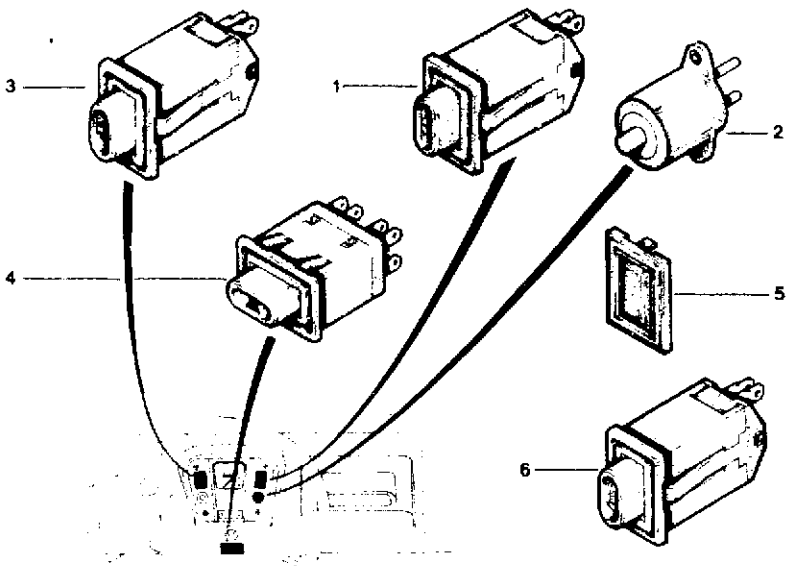

135 5-522-20

I	NUMEROS		K	▶ 7/78	DESIGNATIONS
1	5AZ	95 493 638	1		**INTERRUPTEUR** SCHALTER SWITCHE INTERRUPTORE INTERRUTTORE – **ESSUIE-GLACE** – F. SCHEIBENWISCHER – F. WINDOW WIPER – DE LIMPIA-PARABRISAS – TERGICRISTALLO
2	5AY	AY 522 273 A	1		– **LAVE-GLACE** – SCHEIBENWASCHANLAGE – WINDOW WASHER – LAVA-PARABRISAS – LAVACRISTALLO
3	5BF	5 491 286	1	«DAV» 11/76▶	– **SIGNAL DE DÉTRESSE** – F. WARNBLINKANLAGE – F. DANGER WARNING SIGNAL – DE SENAL DE PELIGRO – SEGNALE PERICOLO
4	5GX	5 481 270	1	7/76 ▶ 7/78	– **DÉTECTION VOYANT** – Z. PROBIER. DER K-LEUCHT – F. TELL-TALE TESTING – COMPROBACION DE ESPIAS – CONTROLLO SPIE
5	7GX	75 515 005	?		**OBTURATEUR** STOPFEN PLUG OBTURADOR OTTURATORE
				XT	**PIECES SPÉCIALES** SPEZIALTEILE SPECIAL PARTS PIEZAS ESPECIALES PEZZI SPECIALI **INTERRUPTEUR** SCHALTER SWITCHE INTERRUPTOR INTERRUTORE
6	5MA	75 492 223	1	«DAV» - (8) 5/78 ▶	– **FEU AR DE BROUILLARD** – F. HINT. NEBELLEUCHTE – F. REAR FOG LAMP – DE LUZ TRAS. DE NIEBLA – PER FANAL. POST. NEBBIA

137

5–522–20–A

G-12

INTERRUPTEURS
SCHALTER
SWITCHES
INTERRUPTORES
INTERRUTTORI

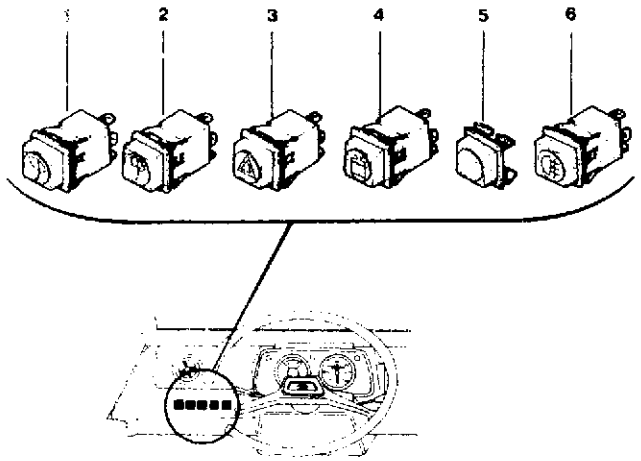

135

5-522-20 A

I	NUMEROS		K	7/78 ▶	DESIGNATIONS
					INTERRUPTEUR SCHALTER SWITCH INTERRUPTORE INTERRUTTORE
1	5CA	95 493 678	1	«TORRIX» 6/81 ▶	– **ESSUIE-GLACE** – F. SCHEIBENWISCHER – F. WINDOW WIPER – DE LIMPIA-PARABRISAS – TERGICRISTALLO
	5VD	*75 491 926* RP 95 493 681	1	«SEIMA»	– **LAVE-GLACE** – SCHEIBENWASCHANLAGE – WINDOW WASHER – LAVA-PARABRISAS – LAVACRISTALLO
2	5VD	*95 492 746* RP 95 493 681	1	«TORRIX»	–
3	5VD	95 494 403	1		– **SIGNAL DE DÉTRESSE** – F. WARNBLINKANLAGE – F. DANGER WARNING SIGN. – DE SEÑAL DE PELIGRO – SEGNALE PERICOLO
	5VD	95 493 671		«SEIMA» 6/81 ▶	–
4	5VD	75 492 396	1	«TORRIX»	– **DÉTECTION VOYANT** – Z. PROBIER. DER K-LEUCH. – F. TELL-TALE TESTING – COMPROBACION DE ESPIA – CONTROLLO SPIE
	5VD	*75 491 859* RP 75 492 396	1	«SEIMA» –	–
5	5VD	5 508 471	1	▶ 6/81	**OBTURATEUR** STOPFEN PLUG OBTURADOR OTTURATORE
	5CA	95 570 026	1	6/81 ▶	–
				ARMÉE	**PIECES SPÉCIALES**
1	5AY	95 493 838	1	6/81 ▶	**COMMUTATEUR D'ESSUIE-GLACE**
3	5VD	75 492 598 RP 95 494 403	1	«TORRIX» 6/81 ▶	**COMMUTATEUR SIGNAL DE DÉTRESSE**
				XT	**PIECES SPÉCIALES** SPEZIALTEILE SPECIAL PARTS PIEZAS ESPECIALES PEZZI SPECIALI **INTERRUPTEUR** SCHALTER SWITCH INTERRUPTORE INTERRUTTORE
6	5VD	75 491 844 RP 95 493 679	1	«SEIMA» - (8)	– **FEU AR DE BROUILLARD** – F. HINT. NEBELLEUCHTE – F. REAR FOG LAMP – DE LUZ TRAS. DE NIEBLA – PER FANAL. POST. NEBBIA
	5VD	75 492 398 RP 95 493 679	1	«TORRIX» - (8) –	

137

5-531-10

G-11

BATTERIE – SUPPORT – CABLES
BATTERIE – BATTERIEHALTERUNG – KABEL
BATTERY AND SUPPORT – CABLES
BATERIA – SOPORTE – CABLES
BATTERIA – SUPPORTO –CAVI

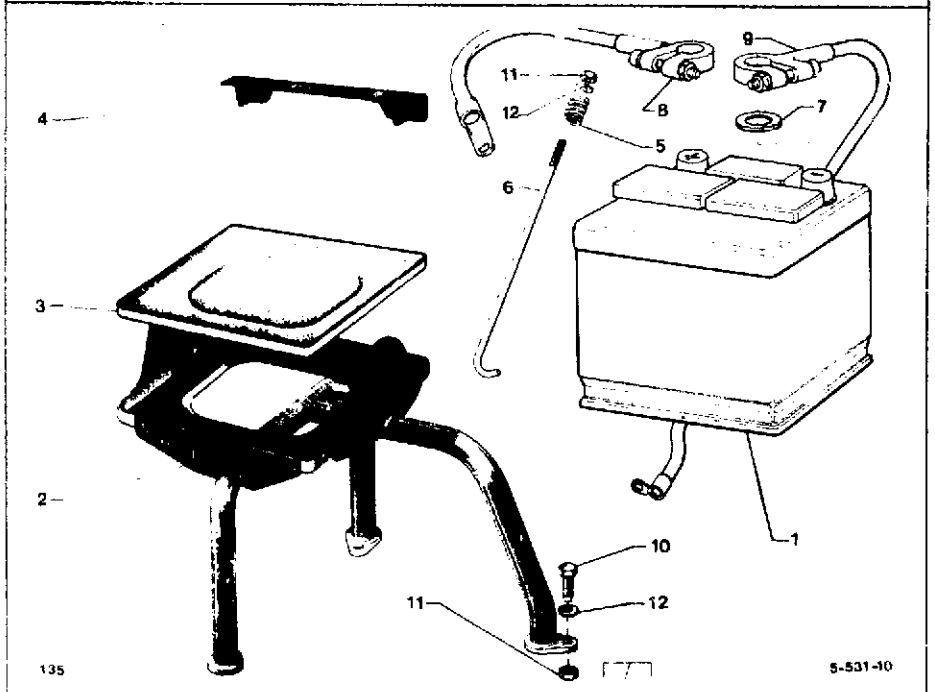

I	NUMEROS		K			DESIGNATIONS
1		ZC 9 858 312 U NFP	1		▶ 3/74	**BATTERIE** BATTERIE BATTERY BATERIA BATTERIA
	3AA	*ZC 9 858 313 U* RP ZC 9 865 474 U	1	35 AH	3/74 ▶	–
		ZC 9 858 186 U RP ZC 9 865 474 U	1	12 V - 35 A	3/74 ▶	–

I	NUMEROS		K			DESIGNATIONS
2	5AY	AY 531 88 B	1			**SUPPORT DE BATTERIE** BATTERIEHALTERUNG BATTERY SUPPORT SOPORTE DE BATERIA SUPPORTO PER BATTERIA
	5AA	75 510 916	1		10/76 ▶	–
3	5AY	AY 531 8	1	203 x 178 x 10		**BAC DE BATTERIE** BATTERIETROG BATTERY TRAY BANDEJA DE BATERIA CASSETTO PER BATTERIA
4	5AY	AYB 531 55	1			**BRIDE AVEC ÉCRAN** HALTEFLANSCH CLAMP WITH PLATE BRIDA TRAVERSINO
5	5AM	AM 531 72	2	ϕ INT 5,5 - LON 15		**RESSORT** FEDER SPRING MUELLE MOLLA
6	5AY	*AY 531 87 C* RP AZ 531 87 C	2	LON 175	▶ 3/74	**TIRANT** STREBE TIE-ROD TIRANTE TIRANTE
	5AA	AZ 531 87 A	2	LON 258 3/74	▶ 9/74	–
	5AA	AZ 531 87 C	2	LON 225	9/74 ▶	–
7	5AA	75 444 179	2	16 x 40 x 3		**RONDELLE FEUTRE** FILZSCHEIBE FELT WASHER ARANDELA DE FIELTRO RONDELLA DI FELTRO
8	5AM	AM 511 5 H	1		▶ 3/74	**CABLE POSITIF** PLUS-KABEL POSITIVE CABLE CABLE POSITIVO CAVO POSITIVO
	5AY	AY 511 5 A	1	NFP	3/74 ▶	–
9	5AY	AYB 511 8	1	NFP	▶ 3/74	**CABLE NÉGATIF** MASSE-KABEL NEGATIVE CABLE CABLE NEGATIVO CAVO NEGATIVO
	3AM	AM 511 8 D	1		3/74 ▶	–
10	3CA	*23 719 319* RP 79 03 101 771	3	TH 7 x 20		**VIS** SCHRAUBE SCREW TORNILLO VITE
11	9TT	*25 241 009*	1	HE 7 x 1,00 - NFP		**ÉCROU** MUTTER NUT TUERCA DADO
	9TT	79 03 032 006	1	HE 5 x 0,80		–
12	9AA	79 03 058 029	3	COϕ 7,2 x 18,2		**RONDELLE** SCHEIBE WASHER ARANDELA RONDELLA
	9DA	22 770 069	2	5,5 x 12 x 1		–

5–531–20 BATTERIE – SUPPORT

G–10 ↓

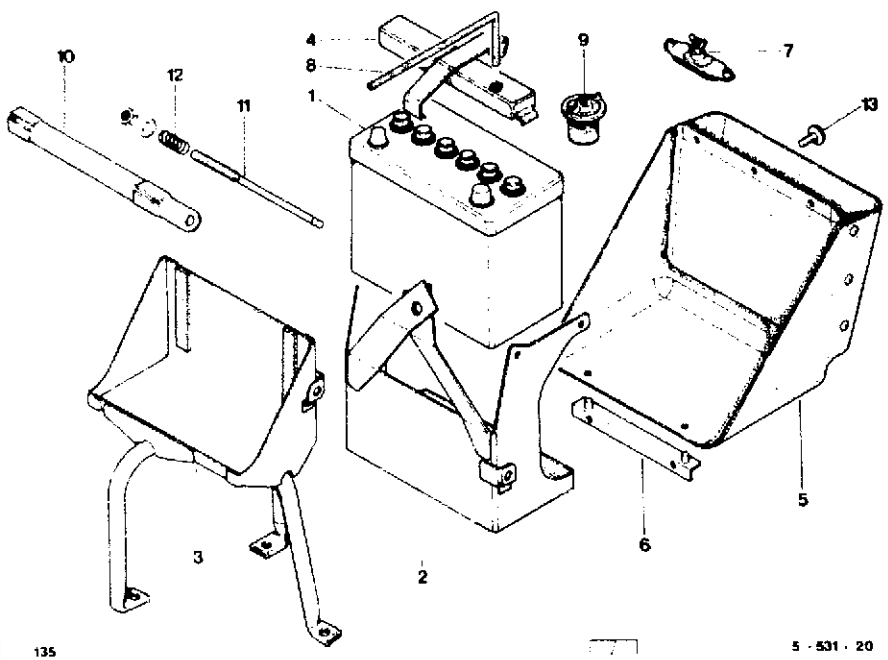

I	NUMEROS		K	ARMÉE	DESIGNATIONS
1	5CA	*ZC 9 858 298 U* RP ZC 9 865 250 U	2	12 V - 43 AH	BATTERIE
	5CA	ZC 9 865 250 U NFP	2	12 V - 48 AH	–
2	2CA	5 416 847	1		SUPPORT COTÉ CARROSSERIE
3	5CA	5 416 837	1		SUPPORT COTÉ MOTEUR
4	2CA	5 416 848	1		BOITIER D'ÉTANCHÉITÉ COTÉ CARROSSERIE
5	2CA	5 477 067 * 405	1		CACHE-BATTERIE
6	2CA	5 416 852	1		ÉQUERRE DE CACHE
7	5HA	ZC 9 712 434 U NFP	1		COUPE-BATTERIE
8	2CA	5 416 850	1	4,5 x 6 x 406	TUBE D'ÉVACUATION
9	1CA	5 418 255	1	«ARELCO»	BORNE
10	2CA	5 416 843	2		BRIDE
11	5AY	AZ 531 87 C	4	LON 175	TIRANT
12	5AM	AM 531 72	4	ϕ INT 5,5 - LON 15	RESSORT
13		*AM 851 172 A*	1	7 x 20 - NFP	VIS DE CACHE

137 **PHARES – COMMANDE DE PHARES – PLAFONNIER**
SCHEINWERFER UND EINSTELLBETAETIGUNG – INNENLEUCHTE
5–541–10 HEADLAMPS AND CONTROL – CEILING LIGHT
FAROS Y MANDO – LUZ DEL TECHO
G-09 FARI E COMANDO – PLAFONIERA

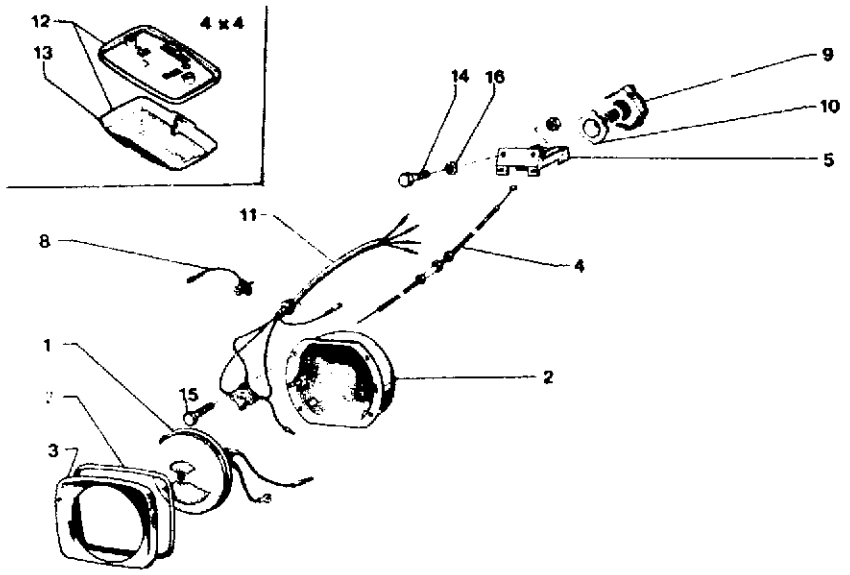

136 12/87 5-541-10

I	NUMEROS		K		DESIGNATIONS
1	5AY	AY 541 218 A	1	G - «CIBIÉ» ▶ 4/79	**BLOC OPTIQUE** LEUCHTEINHEIT OPTICAL ASSY BLOQUE OPTICO BLOCCO OTTICO
	5AY	AY 541 219 A	1	D - «CIBIÉ» ▶ 4/79	–
	5AY	95 539 463	2	G - D «CIBIÉ» 4/79▶	–
	5AY	AY 541 181 A	2	G - D «MARCHAL»	–
2	5AY	AY 541 03 M	1	G - «CIBIÉ» ▶ 4/79	**SUPPORT BLOC OPTIQUE** GEHAEUSE HOUSING SOPORTE SUPPORTO
	5AY	AY 541 03 A	1	D - «CIBIÉ» ▶ 4/79	–
	5AY	95 539 465	2	G - D «CIBIÉ» 4/79 ▶	–
	5AY	AY 541 183 A	1	G - «MARCHAL»	–
	5AY	AY 541 184 A	1	D - «MARCHAL»	
3	5AY	AY 541 12 A	2	▶ 4/79	**ENJOLIVEUR** ZIERRAHMEN RIM BISEL CORNICE
	5AY	75 526 094	2	4/79 ▶	–
	5CA	95 591 843	1	«AZUR»	–
4	5AY	AY 541 012 H	1	G - «CIBIÉ» ▶ 4/79	**CABLE DE COMMANDE** EINSTELLZUG CONTROL CABLE CABLE DE MANDO CAVO DI COMANDO
	5AY	*AY 541 012 A* RP AY 541 03 A	1	D - «CIBIÉ» ▶ 4/79	–
	5AY	95 539 464	2	G - D «CIBIÉ» 4/79 ▶	–
	5AY	*AY 541 179 A* RP AY 541 03 M DEO 1. AY 541 218 A	1	G - «MARCHAL»	–
	5AY	*AY 541 194 A* RP AY 541 03 A DEO 1. AY 541 219 A	1	D - «MARCHAL»	–
5	5AY	AY 541 013 A	1		**COMMANDE DE RÉGLAGE** EINSTELLBETAETIGUNG ADJUSTING CONTROL MANDO DE REGLAJE COMANDO REGOLAZIONE
6	5AA	AY 541 13 B	2	«CIBIÉ»	**CONNECTEUR PORTE-LAMPE** KONTAKTST.ALS BIRNENHALT BULB-HOLDING CONNECTOR CONECTADOR PORTA-LAMPARA CONNETTORE PORTALAMPADA
	5AY	AY 541 185 A	2	«MARCHAL»	–
7	5AY	AY 541 17	2		**JOINT D'ENJOLIVEUR** DICHTUNG F. ZIERRAHMEN RIM SEALING JUNTA DE BISEL GUARNIZIONE PER CORNICE
8	5AZ	5 468 226	2		**DOUILLE VEILLEUSE** BIRNENFASSUNG F. STADTLICHT SIDE LIGHT BULB-HOLDER PORTA-LAMPARA DE MEDIO LUZ PORTALAMPADA LUCE CITTA
9	6TT	ZC 9 804 104 U	1		**BOUTON DE COMMANDE** BETAETIGUNGSKNOPF CONTROL KNOB BOTON DE MANDO POMELLO COMANDO
10	6AA	AZ 644 79	1		**ARMATURE DU BOUTON** KNOPFKOERPER KNOB FRAME ARMADURA DE BOTON ARMATURA DEL POMELLO

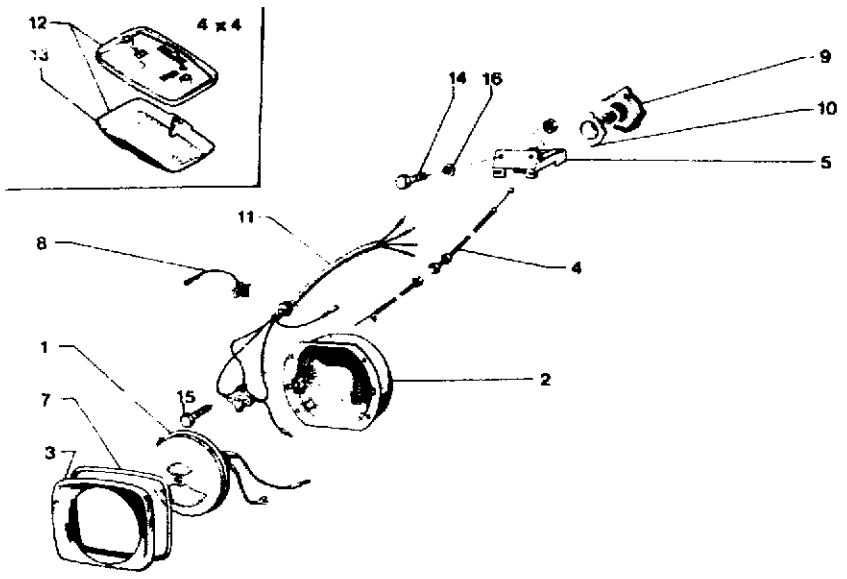

I	NUMEROS		K		DESIGNATIONS
11	5AY	95 539 466	2	4/79 ▶	**CABLERIE DE CONNECTEUR** VERBINDUNG F. KABELBUENDEL CONNECTOR LEAD ASSY HAZ DEL CONECTOR FASCIO DEL CONNETTORE
12	5MA	95 495 352	1	4 x 4	**PLAFONNIER** INNENLEUCHTE INTERIOR LIGHT LUZ CENITAL PLAFONIERA
13	5MA	5 502 741	1	4 x 4	**CABOCHON DE PLAFONNIER** LEUCHTENDECKEL INTERIOR LIGHT COVER TAPA DE LUZ CENITAL COPERCHIO PLAFONIERA
14	9TT	79 03 201 013	1	TH 5 x 20	**VIS** SCHRAUBE SCREW TORNILLO VITE
15	9TT	79 03 201 012	6	TH 5 x 14	–
16	9AA	79 03 058 027	8	CO Ø 5,1 x 12,2	**RONDELLE** SCHEIBE WASHER ARANDELA RONDELLA
				(B)	**PIÈCES SPÉCIALES** SPEZIALTEILE SPECIAL PARTS PIEZAS ESPECIALES PEZZI SPECIALI
12	5VD	95 492 822	1	5/79 ▶	**PLAFONNIER** INNENLEUCHTE CEILING LIGHT LUZ DEL TECHO PLAFONIERA
13	5GX	5 484 787	1	5/79 ▶	**CABOCHON DE PLAFONNIER** DECK. F. INNENLEUCHTE CEILING LIGHT COVER TAPA DE LUZ DEL TECHO COPERCHIO PLAFONIERA

137 **FEUX INDICATEURS AVANT – CENTRALE CLIGNOTANTE**
VORDERE BLINKER – BLINKGEBER
5-541-20 FRONT INDICATOR LIGHTS – FLASHER UNIT
LUCES INDICADORAS DELANTERAS – CAJA DE DESTELLO
G-07 ↓ FANALINI INDICATORI ANTERIORI – LAMPEGGIATORE

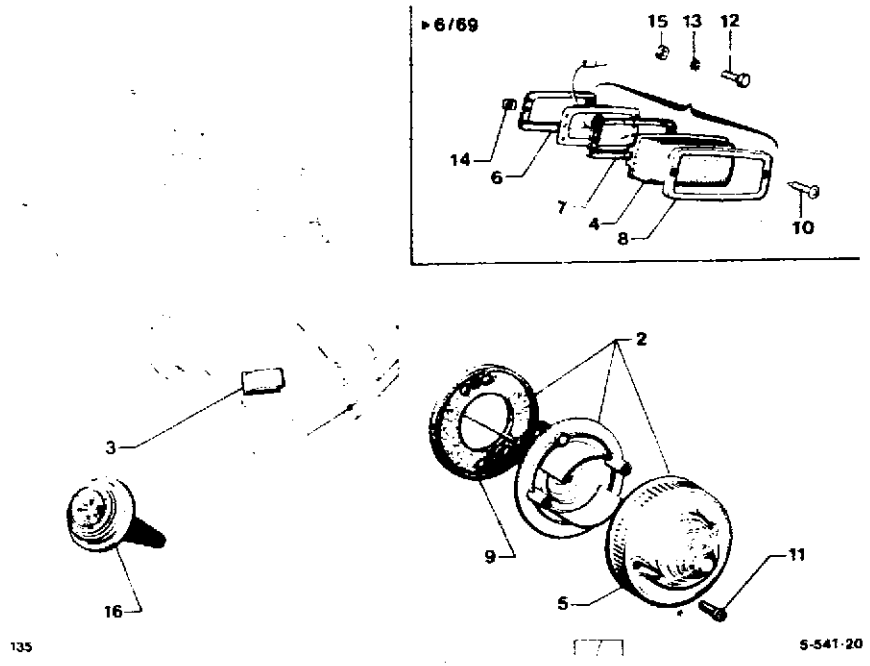

I	NUMEROS		K	▸ 7/77	DESIGNATIONS
1	5AA	*AZ 575 1*	2	NFP ▸ 6/69	**INDICATEUR** BLINKER INDICATOR INDICATOR INDICATORE
2	5AA	*HY 575 201 A* RP AZ 575 201 A	2	«AXO» 6/69 ▸ 9/74	–
3	5AY	*AY 575 100 A*	1	NFP ▸ 6/69	**CENTRALE CLIGNOTANTE** BLINKERZENTRALGEHAEUSE FLASHER UNIT CAJA DE DESTELLO SCATOLA DI LAMPEGGIO
	5CD	5 490 404 RP 75 429 672	1	«CARTIER» 7/73 ▸ RMP 6/69 ▸ 7/73	–
4	5AA	*AZ 575 239 A*	2	NFP ▸ 6/69	**CABOCHON ORANGE** DECKEL, ORANGE COVER, ORANGE TAPA ANARANJADA COPERCHIO ARANCIONE
5	5AA	AZ 575 250 A	2	«AXO» 6/69 ▸	–
6		*AZ 575 73*	2	NFP ▸ 6/69	**JOINT** DICHTUNG F. GEHAEUSE HOUSING SEALING JUNTA DE CAJA GUARNIZIONE PER SCATOLA
7	5AA	*AZ 575 34*	2	NFP ▸ 6/69	–
8	5AA	*AZ 575 33*	2	NFP ▸ 6/69	**COLLERETTE** ZIERRAHMEN RIM MARCO CORNICE
9		DJF 544 144 A **NFP**	2	«AXO» 6/69 ▸	**SEMELLE** UNTERLAGE BASE PIECE BASE BASETTA
10	9MA	*22 610 069* RP 79 03 016 140	4	TF 3,5×15 ▸ 6/69	**VIS** SCHRAUBE SCREW TORNILLO VITE
11	5DA	DJF 544 16 A	4	**NFP** 6/69 ▸ 12/76	–
	5AA	*5 506 708* RP AY 575 76 A	4	12/76 ▸	–
12	9TT	*23 659 019* RP 79 03 201 011	4	TH 5×12 ▸ 6/69	–
13	9TT	79 03 056 005	4	CR Ø 5,2×9,4 ▸ 6/69	**RONDELLE** SCHEIBE WASHER ARANDELA RONDELLA
14	3TT	*ZC 9 615 714 U*	8	CLIP Ø 3,5 - NFP ▸ 6/69	**ÉCROU** MUTTER NUT TUERCA DADO
15	9TT	79 03 032 006	4	HE 5×0,80 ▸ 6/69	–
				«ARMÉE»	**PIÈCE SPÉCIALE**
3	5CA	5 416 329	1	«CARTIER» 24 V	**CENTRALE CLIGNOTANTE**

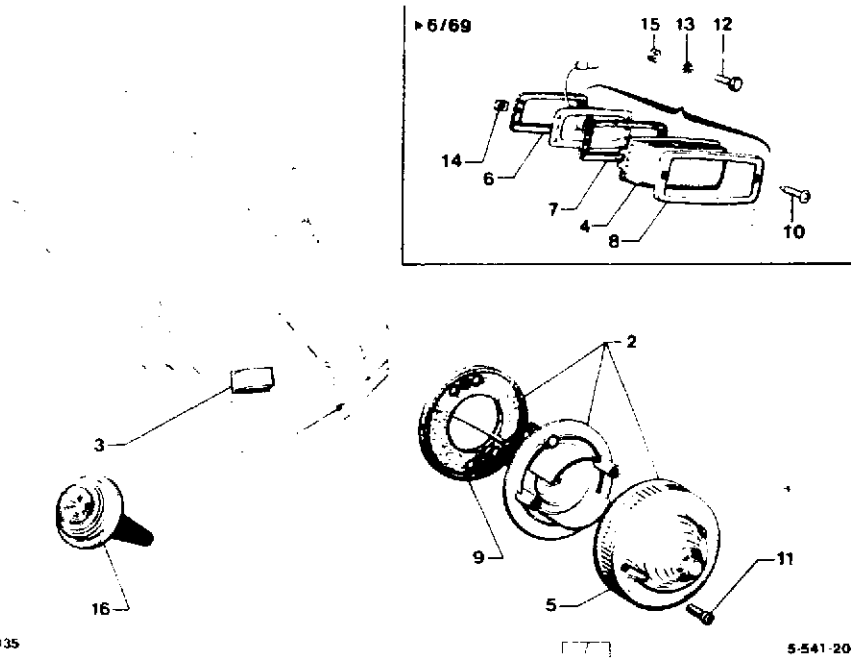

I	NUMEROS		K	▸ 7/77	DESIGNATIONS
				XT	**PIÈCES SPÉCIALES** SPEZIALTEILE SPECIAL PARTS PIEZAS ESPECIALES PEZZI SPECIALI
2	5AY	*AY 575 205 A*	2	(1) NFP ▸ 9/74	**INDICATEUR BLANC** BLINKER, WEISS INDICATOR, WHITE INDICATOR BLANCO INDICATORE BIANCO
	5AA	AZ 575 202 A	2	(1) 9/74 ▸ 10/76	–
	5AA	AZ 575 201 A	2	«AXO» (1) 10/76▸	–
3	5AM	75 429 672	1	«SCINTEX» (USA) RMP	**CENTRALE CLIGNOTANTE** BLINKERZENTRALGEHAEUSE FLASHER UNIT CAJA DE DESTELLO SCATOLA DI LAMPEGGIO
4	5AY	AZ 575 251 A	2	(1) 9/74 ▸ 10/76 RMP *AZ 575 225 A*	**CABOCHON BLANC** DECKEL, WEISS COVER, WHITE TAPA BLANCA COPERCHIO BIANCO
16	5AM	*AM 575 014 A* RP 5 402 230	2	«CARELLO» (1)	**FEU DE RAPPEL LATÉRAL** SEITENLEUCHTE LATERAL LIGHT LUZ LATERAL INDICATORE LATERALE
	5AM	5 402 230	2	«SEIMA» (1)	–
	5DA	*5 402 940*	2	«SEIMA» (1) - NFP	**CABOCHON DE FEU DE RAPPEL** DECKEL F. SEITENLEUCHTE COVER F. LAT. INDICATOR TAPA DE LUZ LATERAL COPERCHIO INDICATORE LAT.

137

5-541-20-A

G-05

FEU INDICATEUR AVANT
VORDER BLINKER
FRONT INDICATOR LIGHT
LUZ INDICADORA DELANTERA
FANALINO INDICATOR ANTERIORE

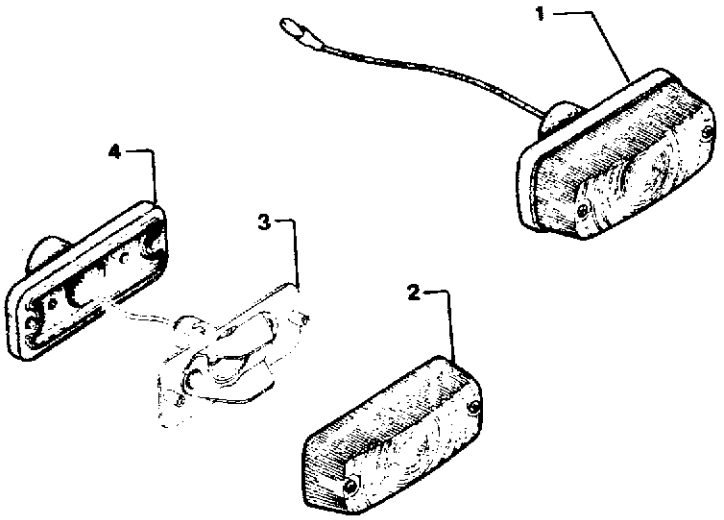

135 5-541-20A

I	NUMEROS		K	7/77 ▶	DESIGNATIONS
1	5CA	75 514 683	2	«SEIMA»	**FEU COMPLET** KOMPLETTER BLINKER COMPLETE LIGHT LUZ COMPLETA FANALINO COMPLETO
2	5CA	75 514 682	2	«SEIMA»	**CABOCHON DE FEU** BLINKERDECKEL LIGHT COVER TAPA DE LUZ COPERCHIO FANALINO
3	5CA	*75 514 681*	2	«SEIMA» - NFP	**PLATINE** BODENPLATTE BASE PLATE PLATINA PIASTRA
4	5CA	*75 514 680*	2	«SEIMA» - NFP	**PROTECTEUR FEU AVANT** ABSCHIRMUNG F. BLINKER LIGHT PROTECTOR PROTECTOR DE LUZ PROTETTORE PER FANALINO

137

5–541– 30

G–04 ↓

ÉCLAIRAGE AVANT
BELEUCHTUNG, VORN
FRONT LIGHTING
ALUMBRADO DEL.
ILLUMINAZIONE ANT.

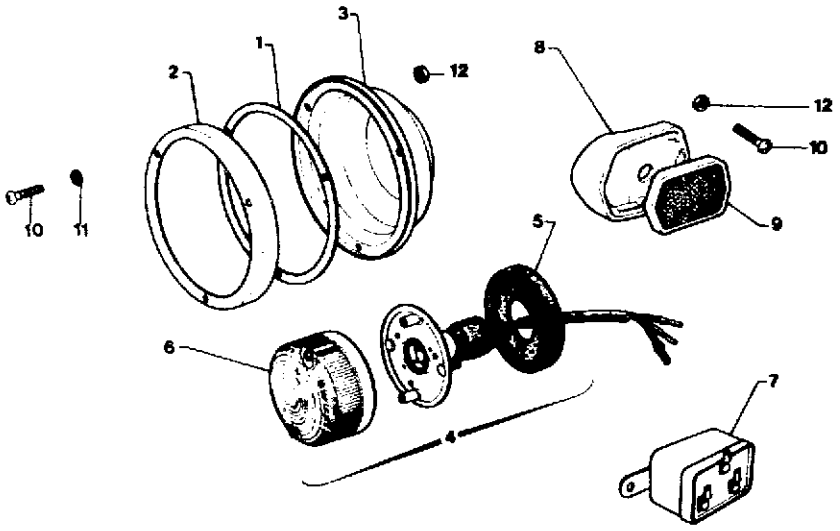

135

5-541-30

I	NUMEROS		K	(USA) ► 1/72	DESIGNATIONS
1	5AY	*AY 541 217 A*	2	NFP	**JOINT** DICHTUNG SEALING JUNTA GUARNIZIONE
2	5AY	*AY 541 242 A*	2	NFP	**ENJOLIVEUR** ZIERRING RIM BISEL CORNICE
3	5AY	*AY 541 299 A*	2	«CIBIÉ» - NFP	**CUVELAGE** GEHAEUSE HOUSING CAJA SCATOLA
4		*DX 575 3*	2	NFP	**INDICATEUR DE DIRECTION** BLINKER DIRECTION INDICATOR INDICADOR INDICATORE
5		*DX 575 7*	2	NFP	**JOINT** DICHTUNG SEALING JUNTA GUARNIZIONE
6		*DX 575 20*	2	NFP	**COUVERCLE** DECKEL COVER TAPA COPERCHIO
7	5AM	75 429 672	1		**BOITIER CLIGNOTEUR** BLINKERZENTRALGEHAEUSE FLASHER UNIT CAJA DE DESTELLO SCATOLA DI LAMPEGGIO
8	5AM	*AMB 579 3*	1	D - NFP	**SEMELLE** UNTERLAGE BASE BASE BASETTA
	5AM	*AMB 579 4*	1	G - NFP	—
9		*AY 579 208 A*	1	G - NFP	**CATADIOPTRE AMBRÉ** RUECKSTRAHLER REFLECTOR, AMBER COLOUR CATAFARO CATADIOTTRO
		AY 579 209 A	1	D - NFP	—
	5AY	*AY 579 203 A*	2	D - G «SEIMA» - NFP	**CATADIOPTRE LUMINEUX** RUECKSTRAHLER REFLECTOR, LUMINOUS CATAFARO CATADIOTTRO
10	9AZ	79 03 007 092	12	TCB 4×12	**VIS** SCHRAUBE SCREW TORNILLO VITE
	9TT	*ZD 9 450 100 W*	4	TCB 4×16 - NFP	—
11	9DA	22 770 069	6	5×12×1	**RONDELLE** SCHEIBE WASHER ARANDELA RONDELLA
	9AA	79 03 058 026	24	CO 4×10×1	—
12	9AS	79 03 032 003	16	HE 4×0,80	**ÉCROU** MUTTER NUT TUERCA DADO
	9TT	*ZD 9 5[illegible] 900 W*	2	HE 5×0,80 - NFP	—

137

5-544-10

G-03

ÉCLAIRAGE ARRIERE
HINTERE BELEUCHTUNG
REAR LIGHTING
ALUMBRADO TRASERO
ILLUMINAZIONE POST.

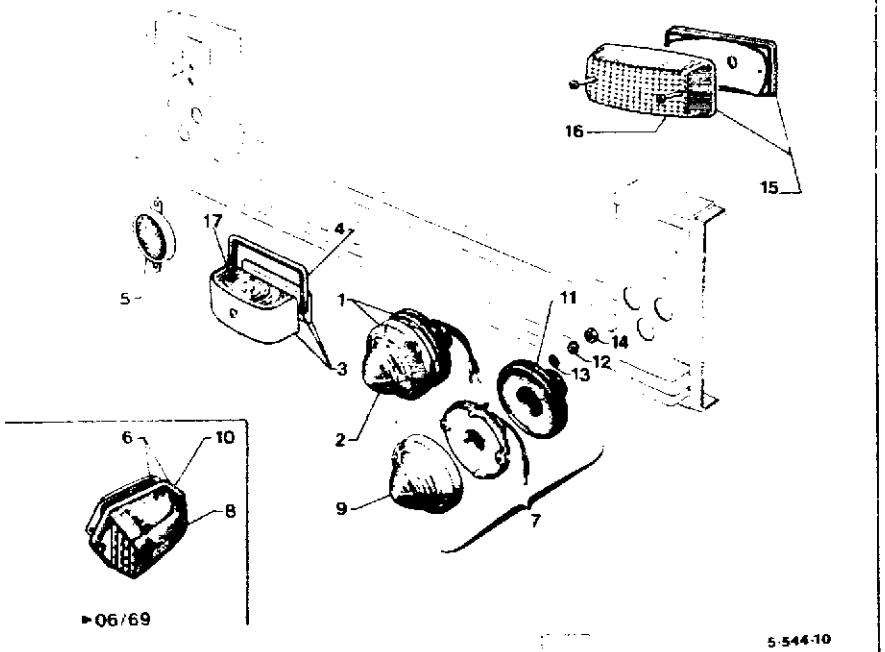

135 5-544-10

I	NUMEROS		K		DESIGNATIONS
1		*AZU 544 016*	2	«SEIMA» - NFP ► 6/69	**FEU POSITION ET STOP** STAND-UND STOPPLEUCHTE POSITION AND STOP LAMP LUZ DE POSICION Y STOP FANALINO POSIZIONE E STOP
	5AK	AK 544 143 A	2	«AXO» 6/69 ►	–
2	5DA	*DF 544 89*	2	«SEIMA» NFP ► 6/69	**CABOCHON ROUGE** DECKEL, ROT COVER, RED TAPA ROJA COPERCHIO ROSSO
	5AK	AK 544 144 A	2	«AXO» 6/69 ►	–

3	5AM	5 417 757	2	«SEIMA» ► 6/69	**ÉCLAIREUR DE PLAQUE**
			1	6/69 ► 9/70	NUMMERNSCHILDLEUCHTE NUMBER PLATE LAMP LUZ DE PLACA MATRICULA FANALINO TARGA
	5CA	5 417 757	1	«SEIMA»-RMP 9/71 ►	–
			2	(CH) 12/70 ►10/73	
	5SM	5 407 385	1	G - (CH) 4 x 4 10/73 ►	–
	5SM	5 407 388	1	D - (CH) 4 x 4 10/73 ►	–
4	5AM	5 417 757	1	7/78 ►	**JOINT D'ÉCLAIREUR** DICHTUNG F. LEUCHTE LAMP SEALING JUNTA DE LUZ GUARNIZIONE FANALINO
5	5AA	5 491 344	2	«SEIMA» 2/77 ►	**CATADIOPTRE** RUECKSTRAHLER REFLECTOR CATAFARO CATADIOTTRO
6	5AA	AZ 575 16 Y	2	«SEIMA» ► 6/69	**INDICATEUR DIRECTION** BLINKER DIRECTION INDICATOR INDICADOR DE DIRECCION INDICATORE DI DIREZIONE
7	5HA	HY 575 202 A	2	«AXO» 6/69 ►	–
8	5AA	*AZ 575 20 T* RP AZ 575 16 Y	2	«SEIMA» ► 6/69	**CABOCHON ORANGE** DECKEL, ORANGE COVER, ORANGE TAPA ANARANJADA COPERCHIO ARANCIONE
9	5HA	HY 575 250 A	2	«AXO» 6/69 ►	–
10	5AA	*AZ 575 8*	2	«SEIMA» - NFP ► 6/69	**JOINT** DICHTUNG SEALING JUNTA GUARNIZIONE
11	5DA	DJF 544 183 A **NFP**	2	«SEIMA» ► 6/69	**SEMELLE** UNTERLAGE BASE BASE BASETTA
	5DA	DJF 544 144 A	4	«AXO» - NFP 6/69 ►	–
12	9AA	79 03 058 027	?	CO ϕ5,1 x 12,2	**RONDELLE** SCHEIBE WASHER ARANDELA RONDELLA
13	9TT	79 03 056 005 *22 334 019*	?	CR ϕ5,2 x 9,4	– –
14	9TT	79 03 032 006	?	HE 5 x 0,80	**ÉCROU** MUTTER NUT TUERCA DADO
				4 x 4	**PIÈCES SPÉCIALES** SPEZIALTEILE SPECIAL PARTS PIEZAS ESPECIALES PEZZI SPECIALI
	5CD	75 520 853	2	AR	**FEU COMPLET** KOMPLETTE LEUCHTE COMPLETE LIGHT LUZ COMPLETA FANALINO COMPLETO

ÉCLAIRAGE ARRIERE (Suite)
HINTERE BELEUCHTUNG (Forts.)
REAR LIGHTING (Cont.)
ALUMBRADO TRASERO (Cont.)
ILLUMINAZIONE POST. (Cont.)

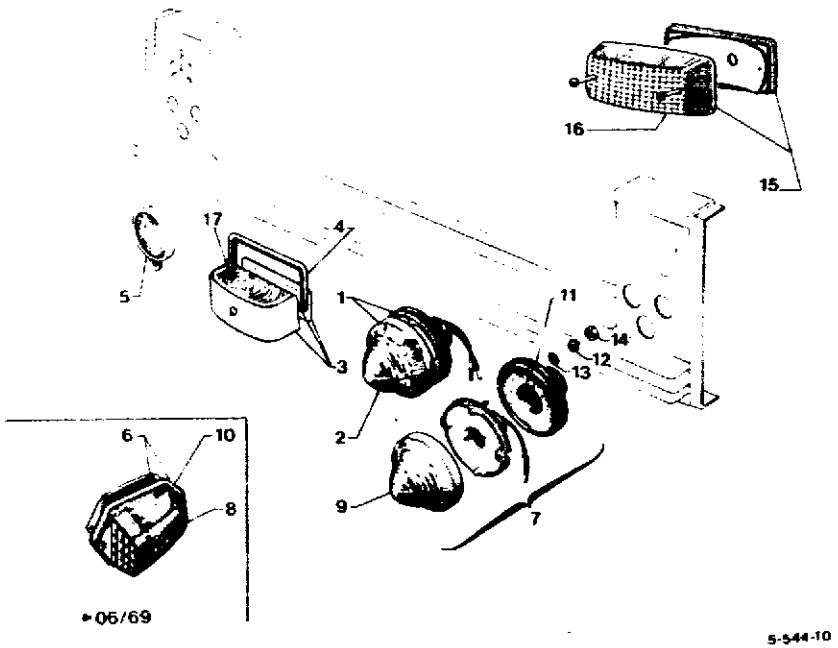

135 5-544-10

I	NUMEROS		K		DESIGNATIONS
				4 x 4	**PIECES SPÉCIALES (Suite)** SPEZIALTEILE (Forts.) SPECIAL PARTS (Cont.) PIEZAS ESPECIALES (Cont.) PEZZI SPECIALI (Cont.)
	5CD	75 520 854	2	AR	**CABOCHON** LEUCHTENDECKEL LIGHT COVER TAPA DE LUZ COPERCHIO FANALINO
	5CD	95 505 177	2	AR	**JOINT** DICHTUNG SEAL JUNTA GUARNIZIONE
	5CD	75 491 790 **NFP**	2	«YORKA»	**CATADIOPTRE** RUECKSTRAHLER REFLECTOR CATAFARO CATADIOTTRO
				XT	**PIECES SPÉCIALES** SPEZIALTEILE SPECIAL PARTS PIEZAS ESPECIALES PEZZI SPECIALI
3	5CA	5 417 757	1	«SEIMA» (I) 7/78 ►	**ÉCLAIREUR DE PLAQUE** NUMMERNSCHILDLEUCHTE NUMBER PLATE LAMP LUZ DE PLACA MATRICULA FANALINO TARGA
15	5AZ	5 491 308	1	«SEIMA» (B) 7/76 ►	**FEU AR DE BROUILLARD**
			1	(GB) 10/79 ►	HINTERE NEBELLEUCHTE REAR FOG LIGHT LUZ TRAS. DE NIEBLA FANALINO POST. NEBBIA
16	5AZ	5 503 772	1	«SEIMA» (B) 7/76 ►	**CABOCHON**
		RP 5 491 308	1	(GB) 10/79 ►	DECKEL COVER TAPA COPERCHIO
17	5CA	5 417 757	1	«SEIMA» (I) 7/78 ►	–

137

5-544-20

G-01 →

ÉCLAIREUR ARRIERE
HINTERE BELEUCHTUNG
REAR LIGHTING
ALUMBRADO TRASERO
ILLUMINAZIONE POSTERIORE

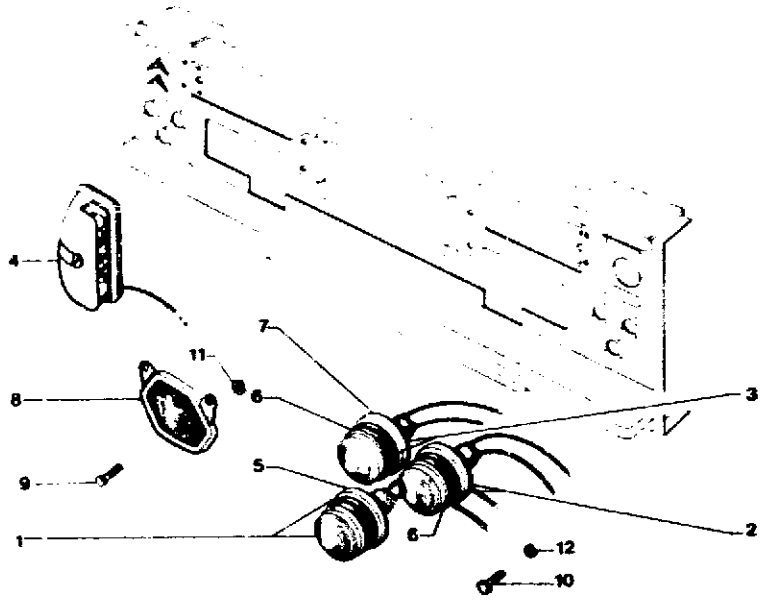

I	NUMEROS		K	(USA) ▶1/72	DESIGNATIONS
1	5DA	*DF 542 01 A*	2	NFP	**FEU DE RECUL BLANC** LEUCHTE F. RW-GANG BACKING LAMP, WHITE LUZ DE RETROCESO BLANCA FANALINO RM BIANCO
2	5DA	*DF 544 09*	2	NFP	**INDICATEUR DE DIRECTION** BLINKER DIRECTION INDICATOR INDICADOR INDICATORE
3	5DA	*DF 544 09 A*	2	NFP	**FEU DE POSITION STOP** STAND-UND STOPPLEUCHTE POSITION AND STOP LAMP LUZ POSICION Y STOP FANALINO POSIZIONE E STOP
4	5DA	*DS 544 08*	2	NFP	**ÉCLAIREUR DE PLAQUE** NUMMERNSCHILDLEUCHTE NUMBER PLATE LAMP LUZ PLACA MATRICULA FANALINO TARGA
5	5DA	*DF 542 03 A*	2	NFP	**CABOCHON BLANC** DECKEL, WEISS COVER, WHITE TAPA BLANCA COPERCHIO, BIANCO
6	5DA	DF 544 151 A NFP	4		**CABOCHON ROUGE** DECKEL, ROT COVER, RED TAPA ROJA COPERCHIO ROSSO
7	5DA	*DF 544 123 A*	6	NFP	**JOINT** DICHTUNG SEALING JUNTA GUARNIZIONE
8	5DA	DF 579 1 B	4		**CATADIOPTRE ROUGE** RUECKSTRAHLER, ROT REFLECTOR, RED CATAFARO ROJO CATADIOTTRO ROSSO
9	9TT	79 03 007 061	4	TCB 4 x 16	**VIS** SCHRAUBE SCREW TORNILLO VITE
10	9TT	*ZD 9 450 500 W*	18	TCB 3 x 10 - NFP	–
11	9AS	79 03 032 003	4	HE 4 x 0,80	**ÉCROU** MUTTER NUT TUERCA DADO
12	9TT	79 03 232 001	18	HE 3 x 0,50	–

137

5-561-10

H-01

ESSUIE-GLACE «SEV-MARCHAL»
SCHEIBENWISCHER
WINDSCREEN WIPER
LIMPIA-PARABRISAS
TERGICRISTALLO

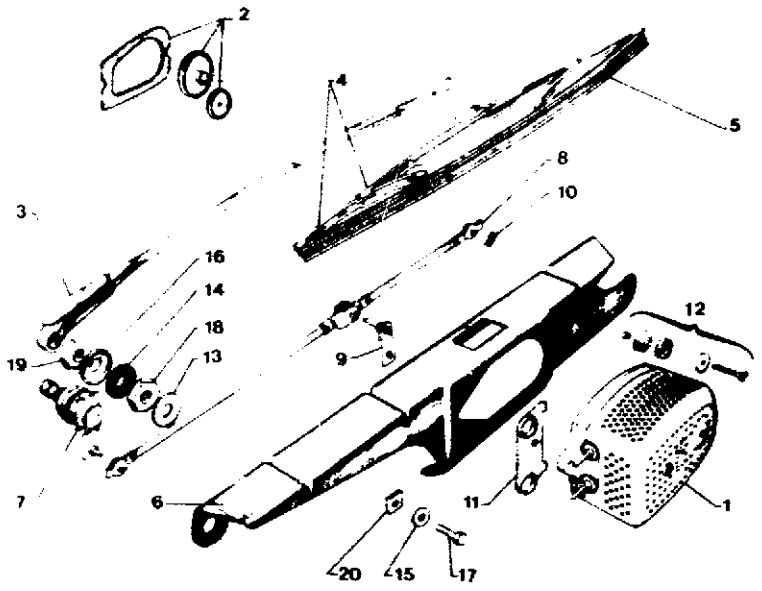

135

5-561-10

I	NUMEROS		K			DESIGNATIONS
1	5AM	*AM 561 2A* RP 95 537 618 DEO 1-95 537 620	1	12 V		**MOTEUR** MOTOR MOTOR MOTORE
	5AY	95 570 975	1	12 V	6/81►	–
2	5AZ	95 537 412 NFP	1		► 6/81	**ACCESSOIRE DE SOCLE** TEIL F. BODENSTUECK BASE PIECE PART ACCESORIO DE BASE ACCESSORIO PER BASETTA
3	5AY	AY 565 212 A NFP	2			**– CHROME** – VERCHROMT – CHROMIUM PLATER – CROMADO – CROMATO
	5AY	95 586 926	2			**– NOIR OPAQUE** – SCHWARZ – BLACK – NEGRO – NERO
4	5AM	*AM 565 12* RP ZC 9 865 224 U	2	«SEV-MARCHAL»		**RACLETTE** WISCHBLATT WIPER BLADE ESCOBILLA TERGITORE
		ZC 9 865 851 U	2			– –
5	5AM	AM 565 235 A	1	«SEV-MARCHAL»		**LAME DE RACLETTE** WISCHGUMMI WIPER RUBBER STRIP CAUCHO DE ESCOBILLA GOMMA DEL TERGITORE
6	5AY	AY 565 14	1		► 6/81	**SUPPORT** TRAGBLECH BRACKET SOPORTE SUPPORTO
	5AY	95 578 370	1		6/81 ►	–
7	5AY	AY 565 5	2			**AXE DE BALAI** ACHSE F. WISCHERARM WIPER ARM SPINDLE EJE DE PORTAESCOBILLA PERNO PER SPAZZOLA
8	5AY	AY 565 7	1		► 6/81	**BIELLE** GESTAENGE ROD BIELA BIELLA
	5AY	95 578 368	1		6/81 ►	–
9	5AY	AY 565 113	1		► 6/81	**MANIVELLE** KURBEL CRANK MANIVELA MANOVELLA
	5AY	95 578 369	1		6/81 ►	–
10	5AA	AZ 565 70	4			**CLIP** HALTECLIPS CLIP CLIP GRAFFETTA
11	5AA	AZ 561 6	1	G	► 6/81	**PATTE SUPPORT** TRAGLASCHE F. MOTOR MOTOR SUPPORT BRACKET PATA SOPORTE MOTOR STAFFA SUPPORTO MOTORE
	5AA	AZ 561 6 A	1	D	► 6/81	–
						PORTE-RACLETTE NU WISCHERARM, OHNE AUSRUEST. WIPER ARM, ONLY BRAZO DESNUDO BRACCIO NUDO

137

5-561-10

H-02

ESSUIE-GLACE «SEV-MARCHAL» (Suite)
SCHEIBENWISCHER (Forts.)
WINDSCREEN WIPER (Cont.)
LIMPIA-PARABRISAS (Cont.)
TERGICRISTALLO (Cont.)

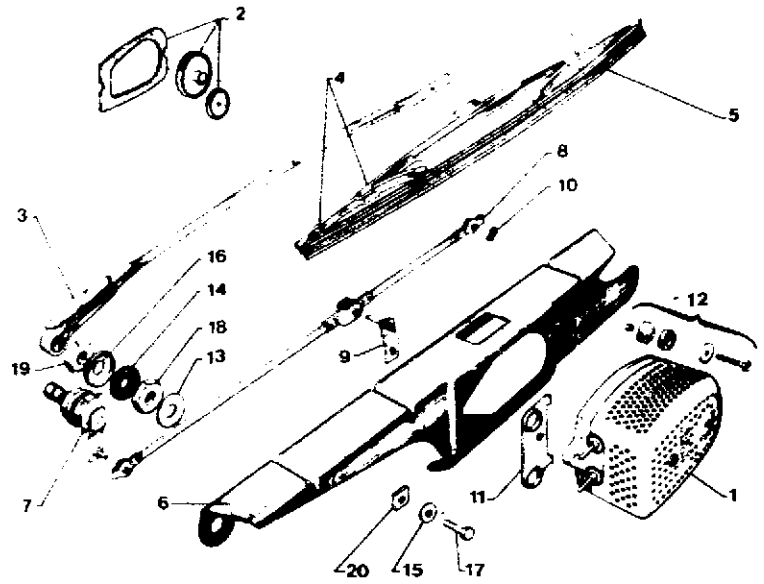

s-561-10

35

I	NUMEROS		K		DESIGNATIONS
12	5AA	AZ 561 013 A	1	▶ 6/81	**JEU DE PIECES** SATZ TEILE PARTS SET JUEGO DE PIEZAS SERIE DI PEZZI
13	5AA	AZ 565 49 A	2	16,2 x 24 x 0,5	**RONDELLE** SCHEIBE WASHER ARANDELA RONDELLA
14	5AA	AZ 565 96	2	CC	–
15	9AA	79 03 058 027	2	CO φ5 x 12	–
16	5AA	AZ 565 49	2		**CUVETTE** TELLER CUP CUBETA SCODELLINO
17	9TT	*23 663 019* RP 79 03 201 013	2	TH 5 x 20	**VIS** SCHRAUBE SCREW TORNILLO VITE
18	5AA	AZ 565 79	2	HE 16 x 1,00	**ECROU** MUTTER NUT TUERCA DADO
19	5AA	79 20 024 376	2	HE 16 x 1,00	–
20	9AY	21 261 019	2	O φ5 x 0,75	–
				ARMÉE	**PIECE SPÉCIALE**
1	5CA	5 416 327	1	24 V ▶ 6/81	**MOTEUR**
	5CA	95 570 977	1	24 V 6/81 ▶ (USA)	– **PIECES SPÉCIALES** SPEZIALTEILE SPECIAL PARTS PIEZAS ESPECIALES PEZZI SPECIALI
1	5AY	AY 561 102 A	1	12 V	**MOTEUR A 2 VITESSES** ZWEIGANGMOTOR TWO-SPEED MOTOR MOTOR DE 2 VELOCIDADES MOTORE A 2 VELOCITA
3	5AY	*AZ 565 201 A*	2	NFP	**RACLETTE** WISCHBLATT WIPER BLADE ESCOBILLA TERGITORE
	5AY	ZC 9 875 262 U	2	«PJ»	–

137
5-564-10
H-03 ↑

LAVE-GLACE «STOP»
SCHEIBENWASCHANLAGE
WINDSCREEN WASHER
LAVA-PARABRISAS
LAVACRISTALLO

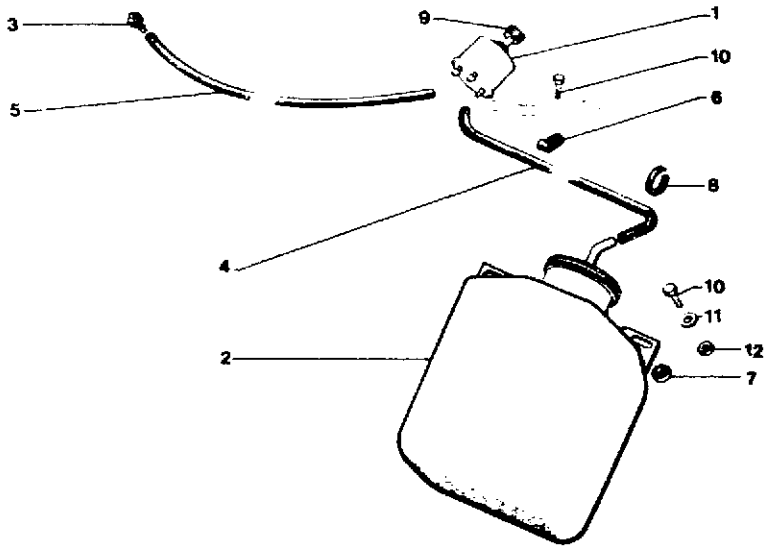

135 5-564-10

I	NUMEROS		K	▶ 9/74	DESIGNATIONS
1	5AY	79 20 021 060	1		**POMPE** PUMPE PUMP BOMBA POMPA
	5CA	5 402 253 **NFP**	1	4/71 ▶	– **SANS BOUTON** – OHNE KNOPF – WITHOUT KNOB – SIN BOTON – SENZA PULSANTE

2	6AY	AY 564 221 A	1		**RÉSERVOIR** BEHAELTER RESERVOIR DEPOSITO SERBATOIO
3	6AY	*AY 564 022 A*	2	NFP ▶ 4/71	**GICLEUR** DUESE NOZZLE SURTIDOR SPRUZZATORE
	5CA	N 564 8 - **NFP**	2	4/71 ▶	–
4	5DA	*5 445 724* RP 26 230 229	1	3,5 x 6,5 x 1130	**TUBE** ROHR PIPE TUBO TUBETTO
5	5CA	*26 230 049*	2	1,8 x 4 x 750 - **NFP**	–
6	6DA	DS 175 63 **NFP**	1		**PATTE NYLON** NYLON-LASCHE NYLON PLUG PATA DE NYLON STAFFA DI NAILON
7	1AY	AY 334 73	2	6 x 17 x 6 - «NYLON»	**ENTRETOISE** ABSTANDSSTUECK SPACER SEPARADOR DISTANZIALE
8	5GX	ZC 9 614 150 U	2	LON 66	**COLLIER** SCHELLE COLLAR COLLAR FASCETTA
9	5CA	*5 402 254*	1	NFP 4/71 ▶	**BOUTON** KNOPF KNOB BOTON PULSANTE
10	9TT	*23 660 319* RP 79 03 201 130	1	TH 5 x 14	**VIS** SCHRAUBE SCREW TORNILLO VITE
	9TT	79 03 201 132	2	TH 5 x 25	–
11	9AA	79 03 058 038 **NFP**	4	CO φ5,1 x 16,2	**RONDELLE** SCHEIBE WASHER ARANDELA RONDELLA
12	9TT	79 1 032 006	2	HE 5 x 0,80	**ÉCROU** MUTTER NUT TUERCA DADO

137

5-564-10-A

H-04 ↑

LAVE-GLACE ÉLECTRIQUE
SCHEIBENWASCHANLAGE, ELEKTRISCH
WINDSCREEN WASHER, ELECTRICAL
LAVA-PARABRISAS ELECTRICO
LAVACRISTALLO ELETTRICO

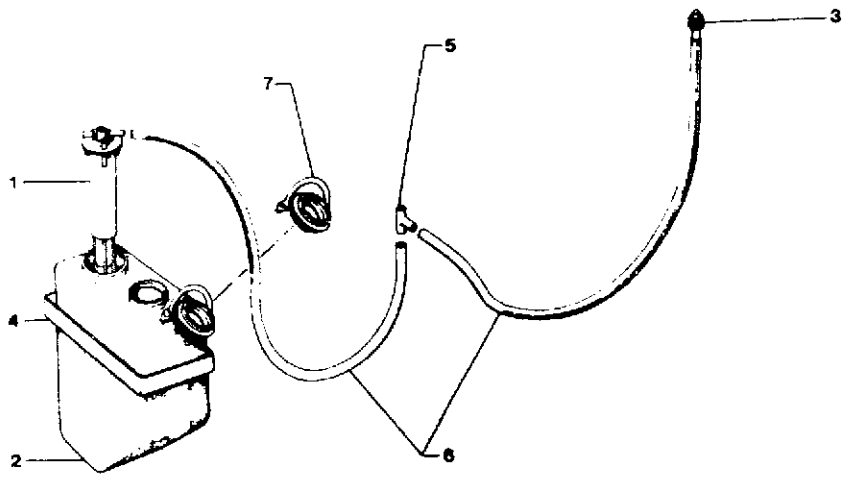

135 5-564-10 A

i	NUMEROS		K	9/74 ▶	DESIGNATIONS
1	5GX	5 485 783 **NFP**	1		**POMPE** PUMPE PUMP BOMBA POMPA
	5GX	75 535 305	1		–
2	5AM	AM 564 72 B	1		**RÉSERVOIR** BEHAELTER TANK DEPOSITO SERBATOIO
3	5CA	5 460 704	2		**GICLEUR** DUESE NOZZLE SURTIDOR SPRUZZATORE
4	5CA	95 546 082	1		**SUPPORT DE RÉSERVOIR** TRAEGER F. BEHAELTER TANK BRACKET SOPORTE DE DEPOSITO SUPPORTO PER SERBATOIO
5	5GX	5 445 722	1		**RACCORD 3 VOIES** DREIWEGEVERBINDUNG THREE-WAY UNION RACOR DE 3 BOCAS RACCORDO A 3 VIE
6	5CA	26 230 229	2	ϕ 6 - LON 1600	**TUBE** ROHR PIPE TUBO TUBETTO
7	5MB	5 483 893	1		**OBTURATEUR** STOPFEN PLUG TAPON TAPPO
				ARMÉE	**PIECE SPÉCIALE**
	5CA	5 461 328	1	24 V	**POMPE**

137

5-564-20

H-05

LAVE-GLACE
SCHEIBENWASCHANLAGE
WINDSCREEN WASHER
LAVA-PARABRISAS
LAVACRISTALLO

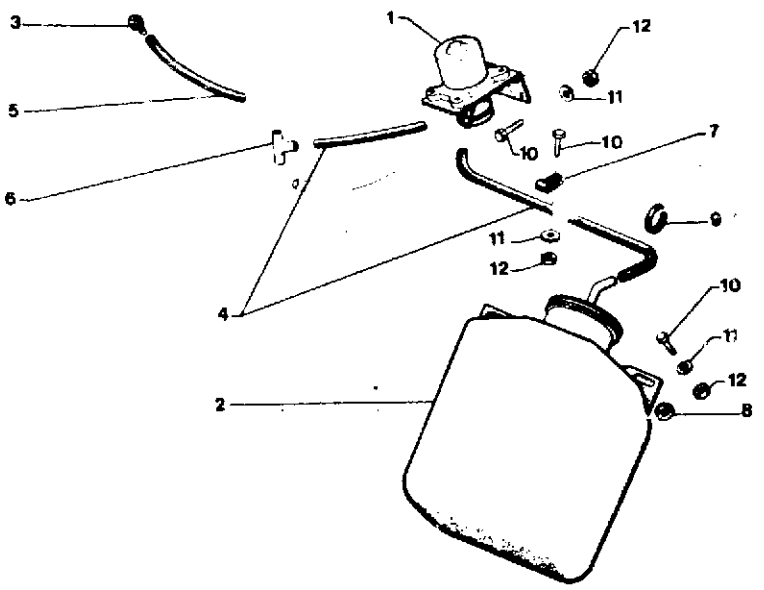

135

5-564-20

I	NUMEROS		K	(USA) ▶ 1/72	DESIGNATIONS
1	5DA	DX 564 209 A **NFP**	1		**POMPE** PUMPE PUMP BOMBA POMPA
2	6AY	AY 564 221 A	1		**RÉSERVOIR** BEHAELTER TANK DEPOSITO SERBATOIO
3	5CA	N 564 8 **NFP**	2	4/71 ▶	**GICLEUR** DUESE NOZZLE SURTIDOR SPRUZZATORE
4	5CA	95 499 014	2	3,5 x 6,5 x 750	**TUBE** ROHR PIPE TUBO TUBETTO
5	5DA	*26 232 949*	1	G - 1,8 x 4,8 x 50 - **NFP** RMP 4/71 ▶	–
	5CA	26 232 969 **NFP**	1	D - 1,8 x 4,8 x 390	–
6	5DA	N 564 104 **NFP**	1	4/71 ▶	**RACCORD 3 VOIES** VERBINDUNG THREE-WAY UNION RACOR RACCORDO
7	6DA	DS 175 63 **NFP**	1		**PATTE DE TUBE** LASCHE PIPE LUG PATA STAFFA
8	1AY	AY 334 73	2	6 x 17 x 6	**ENTRETOISE** ABSTANDSSTUECK SPACER SEPARADOR DISTANZIALE
9	5GX	ZC 9 614 150 U	2	LON 66	**COLLIER** SCHELLE COLLAR COLLAR FASCETTA
10	9GX	79 03 101 249 **NFP**	2	TH 5 x 14	**VIS** SCHRAUBE SCREW TORNILLO VITE
	9SM	*23 645 319* RP 79 03 201 132	2	TH 5 x 25	–
11	9AA	79 03 058 038 **NFP**	?	CO ϕ 5,1 x 16,2	**RONDELLE** SCHEIBE WASHER ARANDELA RONDELLA
12	9TT	79 03 032 006	?	HE 5 x 0,80	**ÉCROU** MUTTER NUT TUERCA DADO

137

5-571-10

H-06

AVERTISSEUR SONORE
SIGNALHORN
HORN
BOCINA
AVVERTITORE ACUSTICO

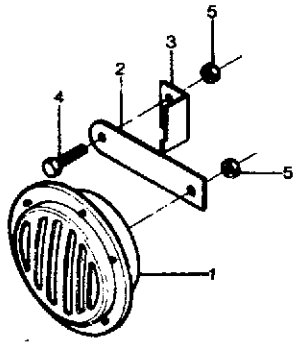

135

5-571-10

1		NUMEROS	K		DESIGNATIONS
1	5AA	5 490 592 **NFP**	1 2	«SEIMA» 9/75 ▶ 11/79 (I)	**AVERTISSEUR ROUTE** STARKTONHORN COUNTRY USE HORN BOCINA DE CARRETERA AVVERTITORE STRADALE
	5GX	95 493 264	1	«KLAXON» 11/79 ▶	–
2	5AZ	5 443 431	2		**LAME** HALTEBLECH BLADE LAMINA LAMA
3	5AM	*AY 571 194 A*	1	(I) - NFP TT 9/74 ▶	**SUPPORT** TRAEGER BRACKET SOPORTE SUPPORTO
4	9BF	*23 738 019* RP 79 03 101 805	1	TH 7 x 18	**VIS** SCHRAUBE SCREW TORNILLO VITE
	9BF	*23 459 519* RP 79 03 101 757	1	TH 7 x 35 - (I)	--
5	9TT	25 241 009 **NFP**	1 2	HE 7 x 1,00 (I)	**ÉCROU** MUTTER NUT TUERCA DADO
	9MA	79 03 232 017	1 2	HE 8 x 1,25 (I)	–
	5AA	AZ 571 96	1		**SUPPORT** TRAEGER BRACKET SOPORTE SUPPORTO
				ARMÉE	**PIECES SPÉCIALES**
1	5CA	5 416 244 **NFP**	1	«SANOR» - 24 V ▶ 2/74	**AVERTISSEUR ROUTE**
	5CA	5 490 603 **NFP**	1	«SEIMA» - 24 V 9/75 ▶ 6/81	–
	5CA	95 495 165	1	«SEIMA» 6/81 ▶	–
2	5AA	*A 571 99*	2	NFP	**LAME**

5-653-10 **ÉQUIPEMENT RADIO**

H-07

I	NUMEROS		K	ARMÉE	DESIGNATIONS
					CONDENSATEUR DE :
	5CA	*5 417 920*	1	NFP	**– ALTERNATEUR**
	5AM	5 436 705	1	▶ 6/81	**– MOTEUR ESSUIE-GLACE**
	5CA	95 495 051 NFP	1	«FACON» 6/81 ▶	–
	5CA	95 495 052 NFP	1	«ARA» 6/81 ▶	–
	5SM	5 433 939 NFP	1		**– RÉGULATEUR**
					SUPPORT DE :
	5CA	*5 418 148*	1	AR - NFP	**– RADIO**
	5CA	*5 418 149*	1	LAT - NFP	**– RADIO**
	5CA	*5 420 632*	1	NFP	**– HAUT-PARLEUR**
	5CA	*5 421 553*	1	NFP	**– COMBINÉ**
	5CA	5 418 146	1		**ENTRETOISE DU SUPPORT D'ANTENNE**
	5CA	*5 418 502*	1	NFP	**CONTREPLAQUÉ DE RACCORDEMENT**
	5CA	*75 517 233*	1	NFP	**RALLONGE SUPPORT RADIO**

H08

ICI FIN DU GROUPE
HIER IST DAS ENDE DER GRUPPE
HERE IS THE END OF GROUPE
AQUI ES EL FIN DEL GRUPO
QUI E LA FINE DEL GRUPPO

5

GROUPE
GRUPPE
GROUPE
GRUPO
GRUPPO

6

VOIR VUE
SIEHE BILD
SEE PICTURE
VER VISTA
VEDERE VEDUTA

J01

TABLEAU DES VUES 09/91
AUFSTELLUNG DER BILDER
TABLE OF PICTURE
TABLA DE VISTAS
TABELLA DELLE VEDUTE

GROUPE
GROUP
GROUP 6
GRUPO
GRUPPO

SOUS-GROUPE UNTERGRUPPE SUBGROUP SUBGRUPO SOTTOGRUPPO	NUMÉRO NUMMER NUMBER NUMERO NUMERO	VUE BILD PICTURE VISTA VEDUTA
SUSPENSION MOTEUR MOTORAUFHAENGUNG ENGINE SUSPENSION SUSPENSION MOTOR SOSPENSIONE MOTORE		
–	6-133-10	J03 J04
SUSPENSION PONT ARRIERE AUFHAENGUNG DER ACHSE REAR AXLE SUSPENSION SUSPENSION PUENTE SOSPENSIONE PONTE POST.		
– 4 × 4 ▶ 7/83	6-133-20	J05
CANALISATION ESSENCE KRAFTSTOFFLEITUNG PETROL PIPING CANALIZACION DE GASOLINA CANALIZZAZIONE BENZINA		
–	6-173-10	J06 J07
RESERVOIR D'ESSENCE KRAFTSTOFFBEHAELTER PETROL TANK DEPOSITO DE GASOLINA SERBATOIO BENZINA		
– 4 × 2	6-175-10	J08 J09
– 4 × 4	6-175-11	J10 J11
ECHAPPEMENT AUSPUFFANLAGE EXHAUST ESCAPE SCARICO		
– AV	6-182-10	J12
– AR	6-182-20	J13 J14
REFROIDISSEMENT MOTEUR MOTORKUEHLUNG ENGINE COOLING REFRIGERACION DE MOTOR RAFFREDDAMENTO MOTORE		
–	6-242-10	J15 K15

PARE-CHOCS STOSSSTANGE BUMPER PARACHOQUES PARAURTI		
– 4 × 4	6-615-10	K13
COMMANDE CHAUFFAGE - DEGIVRAGE BETAETIGUNG F. HEIZUNG UND ENTFROSTUNG HEATING AND DEFROSTING CONTROL MANDO DE CALEFACCION Y DESHIELO COMANDO RISCALDAMENTO DE SBRINATURA		
– ▶ 10/70	6-644-10	K12 K11
– 10/70 ▶	6-644-10A	K10 K09
BOITIER DE CHAUFFAGE – AERATEUR – CONDUIT HEIZUNGSGEHAEUSE – BELUEFTER – LEITUNG HEATING CASING – VENTILATION OUTLET – DUCT CAJA DE CALEFACCION – AIREADOR – CONDUCTOR SCATOLA RISCALDAMENTO – AERATORE – CONDOTTO		
– 10/70 ▶	6-644-20	K08 K07
PALONNIER DE COMMANDE BETAETIGUNGSSCHWENGEL CONTROL ROCKING LEVER BALANCIN DE MANDO BILANCINO DI COMANDO		
– 4 × 4	6-644-30	K06
PLATE-FORME RAHMEN PLATFORM PLATAFORMA PIATTAFORMA		
– 4 × 2	6-721-10	K04 K03
– 4 × 4	6-721-20	K02 K01

137

133-10

J-03

SUSPENSION MOTEUR
MOTORAUFHAENGUNG
ENGINE SUSPENSION
SUSPENSION MOTOR
SOSPENSIONE MOTORE

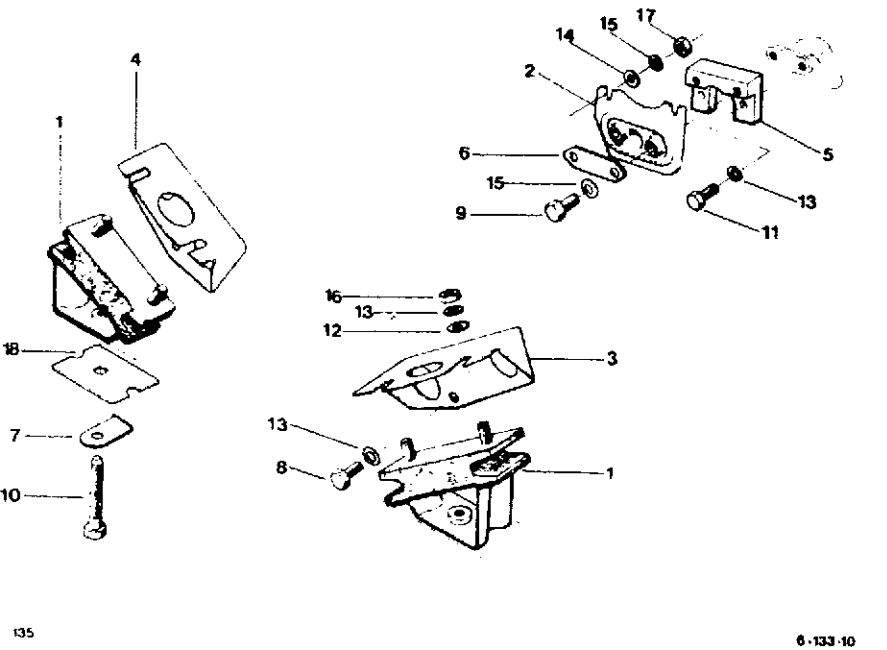

135

6-133-10

NUMEROS		K		DESIGNATIONS
6AY	95 496 097	2	AV - «SOCAT» 9/82 ▶	**BLOC ELASTIQUE** GUMMIKOERPER FLEXIBLE BLOCK BLOQUE ELASTICO BLOCCO ELASTICO
6FF	95 498 432	2	AV - 4×4	–
6AM	AM 133 1	1	AR	**SUPPORT ELASTIQUE** GUMMIKOERPER FLEXIBLE MOUNT SOPORTE ELASTICO SUPPORTO ELASTICO
6FF	75 498 376	1	AR - 4×4 - NFP	–

3	6AM	75 506 357	1	AV G	**SUPPORT** TRAGBLECH BRACKET SOPORTE SUPPORTO
	6AM	75 506 358	1	AV D	–
4	6AA	75 506 357	1	AV G - 4×4	–
	6AA	75 506 358	1	AV D - 4×4	–
5	6FF	95 498 477	1	INTM AR - 4×4	–
6	6AA	95 602 695	1	NFP	**PLAQUETTE** PLAKETTE PLATE PLAQUETA PLACCHETTA
	6FF	75 498 377	1	4×4	–
7	6AA	79 03 058 043	2	Ø 11	**ARRETOIR** SICHERUNGSBLECH LOCKPLATE RETEN ARRESTO
8	6AM	75 520 510	4	TH 10×25	**VIS** SCHRAUBE SCREW TORNILLO VITE
9	9MA	79 03 101 757	2	TH 7×35	–
	9BF	79 03 101 760	2	TH 7×45 - 4×4	–
10	9TT	24 040 009	2	TH 10×60 - NFP	–
	9TT	79 03 201 052	2	TH 10×55 - 4×4	–
11	9SM	79 03 101 769	2	TH 7×16 - 4×4	–
12	7AA	79 03 053 352	4	7,5×25×2 - NFP	**RONDELLE** SCHEIBE WASHER ARANDELA RONDELLA
13	1VD	79 03 056 012	6 8	CR Ø 7×12 Ø 4×4	–
14	9MA	22 602 009	2	Ø 10,5×22 ▶ 5/71 NFP	–
15	9TT	79 03 056 017	6 4	CR Ø 10,5×17 ▶ 5/71 5/71 ▶	–
16	9TT	79 03 032 036	4	HE 7×1,00	**ECROU** MUTTER NUT TERCA DADO
17	9TT	25 245 009	2	HE 10×1,50 ▶ 5/71 NFP	–

SUSPENSION MOTEUR (Suite)
MOTORAUFHAENGUNG (Forts.)
ENGINE SUSPENSION (Cont.)
SUSPENSION MOTOR (Cont.)
SOSPENSIONE MOTORE (Cont.)

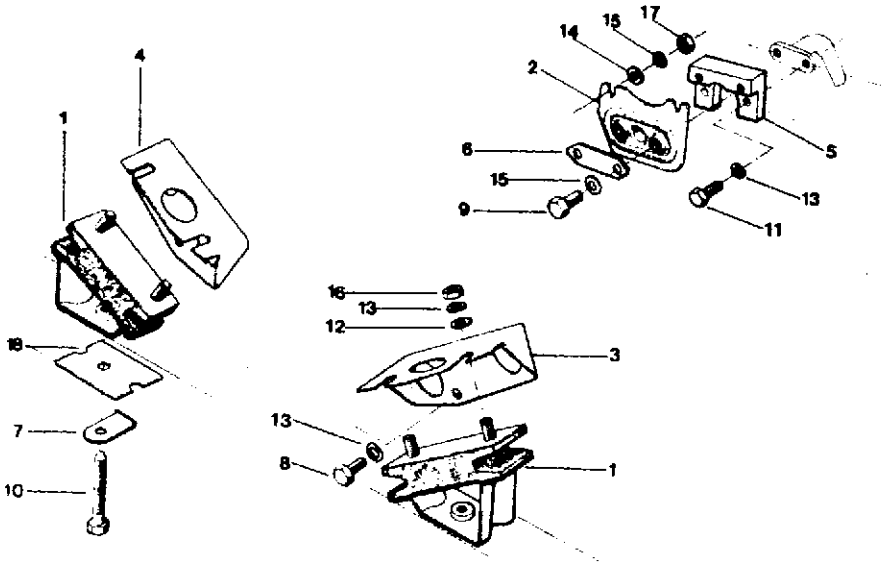

135

6-133-10

I	NUMEROS		K		DESIGNATIONS
				(GB) PO - GA - ARMÉE	**PIECES SPÉCIALES** SPEZIALTEILE SPECIAL PARTS PIEZAS ESPECIALES PEZZI SPECIALI
18	6AA	5 475 156	2		**CALE** UNTERLAGE PACKING SUPLEMENTO SPESSORE

137

6-133-20

J-05 ↑

SUSPENSION PONT ARRIERE
HINTERE ACHSENAUFHAENGUNG
REAR AXLE SUSPENSION
SUSPENSION DEL PUENTE TRAS.
SOSPENSIONE PONT. POST.

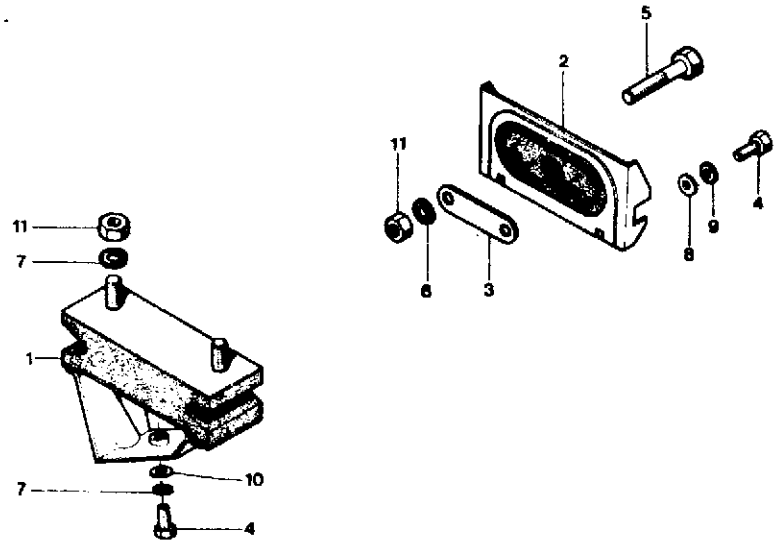

135

6-133-20

	NUMEROS		K	4×4 ▶ 7/83	DESIGNATIONS
1	6FF	95 498 432	2	AV	**BLOC ELASTIQUE** GUMMIKOERPER FLEXIBLE BLOCK BLOQUE ELASTICO BLOCCO ELASTICO
2	6FF	95 498 529	1	AR	**SUPPORT ELASTIQUE** GUMMIKOERPER FLEXIBLE MOUNT SOPORTE ELASTICO SUPPORTO ELASTICO
3	6AA	95 602 696	1	AR	**PLAQUETTE** PLAKETTE PLATE PLAQUETA PLACCHETTA
4	9TT	23 876 019	4	TH 10×25	**VIS** SCHRAUBE SCREW TORNILLO VITE
5	98F	79 03 101 760	2	TH 7×45	–
6	1VD	79 03 055 012	6	CR Ø 7×12	**RONDELLE** SCHEIBE WASHER ARANDELA RONDELLA
7	9TT	79 03 056 017	2	CR ∅ 10×22	–
8	9MA	22 602 019	2	Ø 10×22 - NFP	–
9	9TT	79 03 056 017	2	CR ∅ 10,5×17	–
10	9MA	22 602 019	2	Ø 10	–
11	1VD	79 03 034 071	6	HE 7×1,00	**ECROU** MUTTER NUT TERCA DADO

137

6-173-10

J- 06 ↑

CANALISATION D'ESSENCE
BENZINLEITUNG
PETROL PIPING
CANALIZACION DE GASOLINA
CANALIZZAZIONE BENZINA

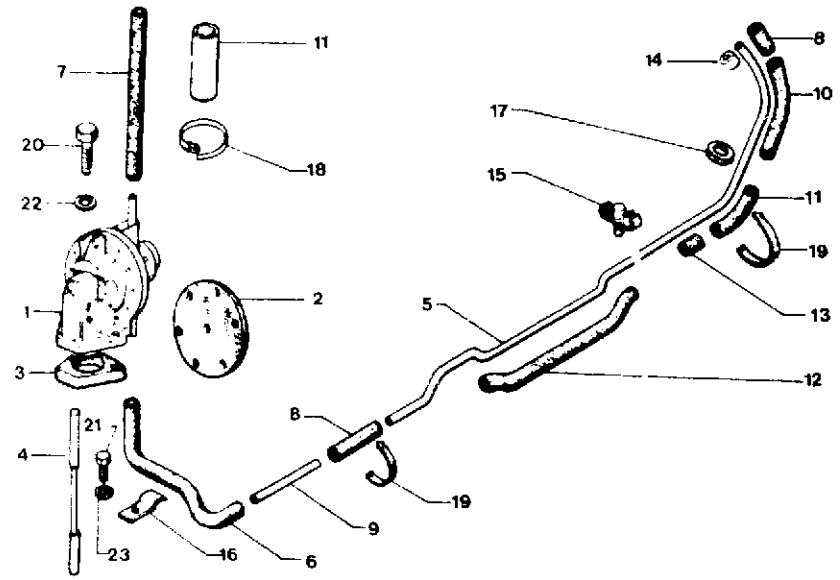

135 10/84 6-173-10

I	NUMEROS		K		DESIGNATIONS
1	6AA	*AY 173 0* RP 75 515 547	1	«GUIOT»	**POMPE A ESSENCE** BENZINPUMPE PETROL PUMP BOMBA DE GASOLINA POMPA BENZINA
	6AA	*95 495 108* RP 75 515 547	1	«SOFABEX»	–
	6AA	*5 482 710* RP 75 515 547	1	«SEV» 6/75 ▶	–
	6FF	75 492 582	1	4 x 4 - «GUIOT»	–
	6AA	*95 495 198* RP 75 515 547	1	«SAVARA»	–
2	6AA	A 173 8	1	«GUIOT»	**MEMBRANE (JEU)** SATZ MEMBRANEN DIAPHRAGMS SET JUEGO DE MEMBRANAS SERIE DI MEMBRANE
	1AA	*5 417 881*	1	ENS - «SEV» NFP	**RÉPARATION** REPARATUR-NECESSAIRE REPAIR KIT NECESER DE REPARACION OCCORRENTE DI RIPARAZIONE
3	6AA	75 522 332	1	1o - ϕ 28,5 - E 10	**ENTRETOISE ISOLANTE** ISOLIERFLANSCH INSULATING PIECE SEPARADOR AISLADOR DISTANZIALE ISOLANTE
4	6AA	75 521 611	1	LON 110,7	**TIGE** STOESSELSTANGE ACTUATING ROD VARILLA ASTINA
5	6SM	79 05 026 709	1	4,5 x 6 x 4400 - 4 x 4	**TUBE**
			1	4 x 2	ROHR PIPE TUBO TUBO
6	6TT	95 655 309	1	5 x 12 x 415	–
7	6RB	*26 231 099*	1	5 x 12 x 320 - NFP	–
8	6AM	26 231 009	3	5 x 12 x 60	
		RP 95 655 309			
9	6AA	*AZU 174 49*	1	NFP ▶ 12/71	**RACCORD** VERBINDUNG UNION RACOR RACCORDO
	1AA	5 400 918	1	12/71 ▶	–
10	6AM	*26 234 259*	1	7,5 x 11 x 180 - NFP	**GAINE DE TUBE** HUELLE F. ROHR PIPE SHEATH VAINA DE TUBO GUAINA DE TUBO
	6BF	95 655 310	1	4 x 4	–
11	6AY	79 05 026 967	2	ϕ 9 - LON 80	–
12	6AA	26 234 279	1	ϕ 7 - LON 310	–
	6AM	*26 234 289*	1	ϕ 7,5 x 400 - 4 x 4-NFP	–
13	6AA	*5 417 242*	4	6 x 10 x 15 - NFP	**BAGUE** HUELSE BUSH CASQUILLO BOCCOLA
14	6AA	*A 174 83*	1	NFP	**RONDELLE DE BUTÉE** ANSCHLAGSCHEIBE STOP WASHER ARANDELA DE TOPE RONDELLA REGGISPINTA
15	4AA	26 198 259	6	▶ 12/71	**AGRAFE** KLAMMER CLIP GRAPA GRAFFETTA
	6AM	AM 174 221 A	7	12/71 ▶	–
	5GX	79 03 078 024	1	4 x 4	–

CANALISATION D'ESSENCE (Suite)
BENZINLEITUNG (Forts.)
PETROL PIPING (Cont.)
CANALIZACION DE GASOLINA (Cont.)
CANALIZZAZIONE BENZINA (Cont.)

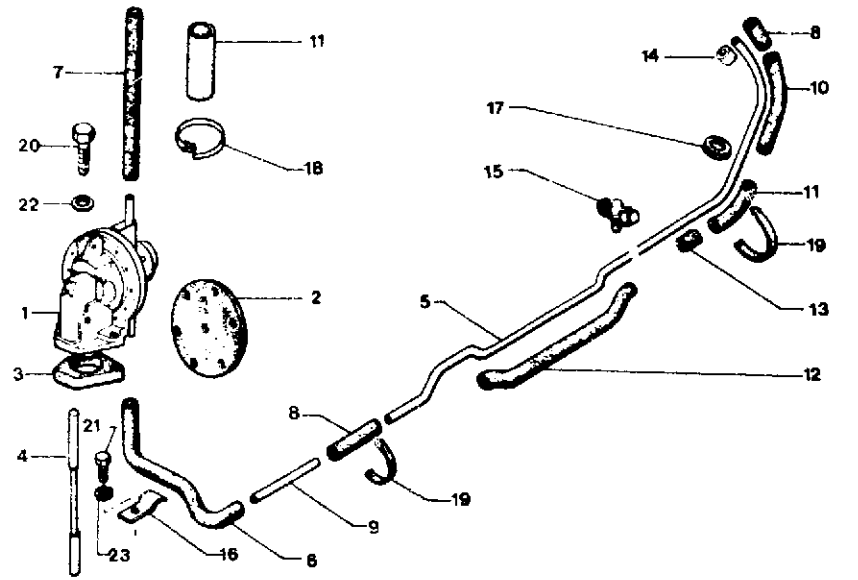

135 10/84 6-173-10

I	NUMEROS		K			DESIGNATIONS
16	6TT	95 624 196	1		12/71 ▶	**PATTE** LASCHE LUG PATA STAFFA
17	9AM	21 073 009	1	ϕ 8	12/71 ▶	**OEILLET** OESE GROMMET OJETE OCCHIELLO
18	2AK	26 140 229 NFP	3			LON 120	**COLLIER** SCHELLE F. ROHR PIPE COLLAR COLLAR DE TUBO COLLARE PER TUBO
19	6AC	26 142 269	1			LON 210 - 4 x 4	–
20	9BF	23 746 509	2			TH 7 x 38	**VIS** SCHRAUBE SCREW TORNILLO VITE
21	9SM	79 03 201 020	1			TH 5 x 16	–
22	9DA	*22 904 019* RP 79 03 058 011	2			CO 7,2 x 14,2 x 1,25	**RONDELLE** SCHEIBE WASHER ARANDELA RONDELLA
23	6AK	79 03 053 372	1			5,25 x 15 x 1	–

137

6-175-10

J-08

RÉSERVOIR D'ESSENCE
BENZINBEHAELTER
PETROL TANK
DEPOSITO DE GASOLINA
SERBATOIO BENZINA

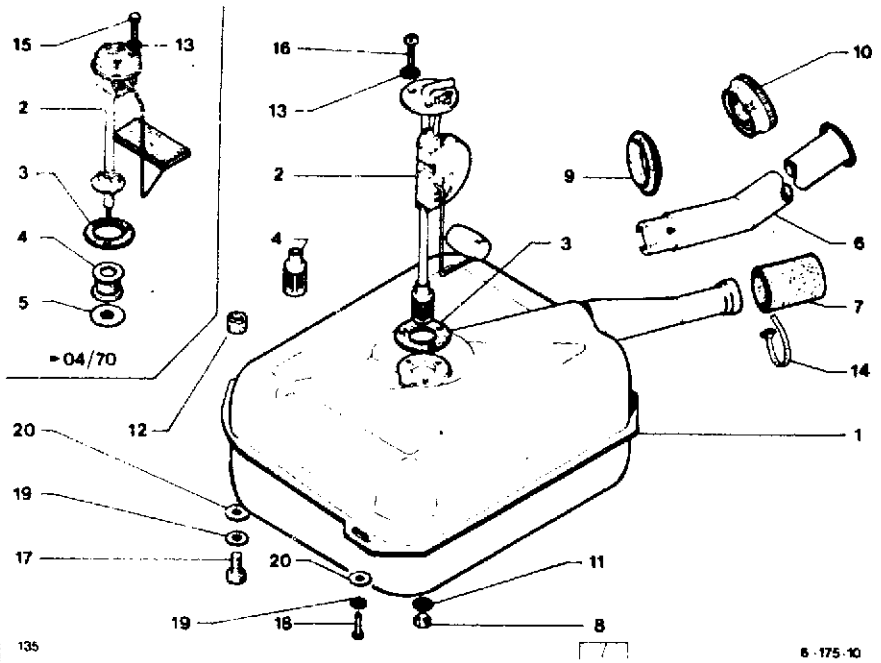

I	NUMEROS		K	4 x 2	DESIGNATIONS
1	6AA	*AY 175 1* RP 95 492 906	1	►7/72	**RÉSERVOIR 25 LITRES** BENZINBEHAELTER, 25 LITER PETROL TANK, 25 LITRES DEPOSITO, 25 LITROS SERBATOIO, 25 LITRI
	6AZ	*5 467 786* RP 95 492 906 DEO 1 - 95 541 376 2- 22 985 029	1	7/74 ► RMP 7/72 ►7/74	– **SANS BOUCHON DE VIDANGE** – OHNE ABLASS-STOPFEN – W/O DRAIN PLUG – SIN TAPON DE PURGA – SENZA TAPPO SPURGO

2	6AY	AY 175 116 A	1	«OS» - 12 V 4/70 ► 4/72 RMP 9/68 ► 4/70	**RHÉOSTAT** MESSRHEOSTAT GAUGE UNIT REOSTATO REOSTATO
	6AA	5 490 692	1	«JAEGER» 12 V 2/76 ► 5/80 RMP 7/72 ► 2/76	–
	6AA	95 493 438	1	«JAEGER» 5/80 ►	–
			1	ARMÉE 7/84 ►	
3	6SM	5 402 981	1	36 x 55 x 2 7/72 ► RMP	**JOINT DU RHÉOSTAT** DICHTUNG F. RHEOSTAT
			1	ARMÉE 7/84 ►	GAUGE UNIT SEALING JUNTA DE REOSTATO GUARNIZIONE PER REOSTATO
4	6AA	*AZ 173 2*	1	NFP ► 4/70	**BLOC FILTRANT** FILTER FILTER BLOQUE FILTRANTE BLOCCO FILTRANTE
	6AA	5 478 012	1	«NYLON» 12/75 ►	–
5	6AA	*A 173 82*	1	ϕ 5 x 0,80 ► 4/70 NFP	**ÉCROU SPÉCIAL** SPEZIALMUTTER SPECIAL NUT TUERCA ESPECIAL DADO SPECIALE
6	6AY	AY 175 204 A	1		**TUBULURE** EINFUELLSTUTZEN FILLER NECK TUBO DE LLENADO BOCCHETTONE
7	6AA	95 589 471	1	44 x 52 x 70	**DURIT** ROHR PIPE TUBO TUBO
8	6MA	75 451 497	1	ϕ 8 x 1,00 ► 5/76	**BOUCHON DE VIDANGE** ABLASSSTOPFEN DRAIN PLUG TAPON DE VACIADO TAPPO DI SCARICO
9	6TT	96 995 620 RP HG 175 15	1	34 x 84 x 15 ► 6/70	**COLLERETTE** RING COLLAR COLLARIN COLLARINO
	6AY	AY 175 247 A		6/70 ►	–
10	6AA	5 506 214	1		**BOUCHON** STOPFEN CAP TAPON TAPPO
	6TT	ZC 9 866 056 U	1	«PJ»	**BOUCHON ANTI-VOL** DECKEL MIT VERSCHLUSS LOCKING CAP TAPON ANTIRROBO TAPPO ANTIFURTO
11	9TT	*22 462 009*	1	8,2 x 12 x 1 - NFP	**JOINT DU BOUCHON** DICHTUNG F. STOPFEN CAP SEAL JUNTA DE TAPON GUARNIZIONE PER TAPPO

RÉSERVOIR D'ESSENCE (Suite)
BENZINBEHAELTER (Forts.)
PETROL TANK (Cont.)
DEPOSITO DE GASOLINA (Cont.)
SERBATOIO BENZINA (Cont.)

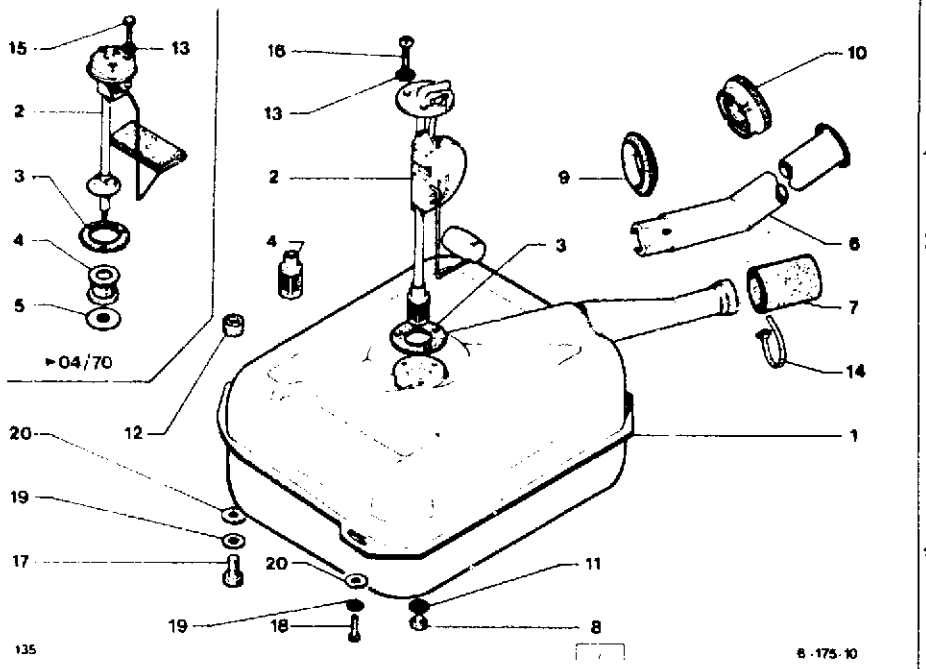

I	NUMEROS		K	4 x 2	DESIGNATION
12	6BF	95 541 373	2	7/79 ►	**ENTRETOISE FIBRE** FIBER-ABSTANDSSTUECK FIBRE SPACER SEPARADOR DE FIBRA DISTANZIALE DI FIBRA
13	6AM	5 412 295	4	4,5 x 8 x 0,5	**JOINT FIBRE** FIBER-DICHTUNG FIBRE GASKET JUNTA DE FIBRA GUARNIZIONE DI FIBRA
14	2TT	SRV 000023	2		**COLLIER** SCHELLE SECURING COLLAR COLLAR FASCETTA
15	9DA	ZD 9 009 830 U **NFP**	3	TR 4 x 30 ► 4/70	**VIS** SCHRAUBE SCREW TORNILLO VITE
	9AA	24 580 309 **NFP**	3	TCB 4 x 30 ► 4/70	–
16	9AZ	79 03 007 092	3	TCB 4 x 12	–
17	9TT	95 623 740	2	TH 7 x 28	–
18	9SM	*23 450 319* RP 79 03 101 769	2	TH 7 x 16	–
19	1VD	79 03 056 012	4	CRv 7,3 x 12 ►7/70	**RONDELLE** SCHEIBE WASHER ARANDELA RONDELLA
20	9AA	7903 053 374 **NFP**	4	7,5x 20 x 1,5 ► 7/70	–
	9AA	7903 058 029	4	CO ϕ 7,2 x 18,2 7/70 ►	–
				ARMÉE ► 7/84	**PIECES SPÉCIALES**
2	6CA	5 415 575	1	«OS» - 24 V ► 7/72	**RHÉOSTAT**
	6CA	5 490 693	1	«JAEGER» - 24 V 2/76 ►	–
3	6SM	5 402 981	1	7/72 ►	**JOINT**
16	9TT	24 516 019 **NFP**	3	TCB 4 x 12 7/72 ►	**VIS**

137

6-175-11

J-10

RÉSERVOIR D'ESSENCE
BENZINBEHAELTER
PETROL TANK
DEPOSITO DE GASOLINA
SERBATOIO BENZINA

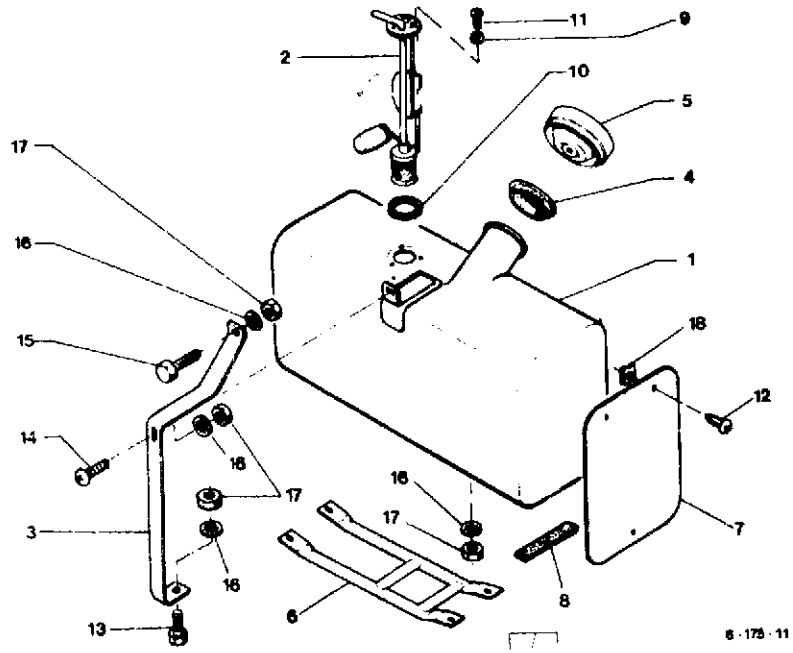

I	NUMEROS		K	4 x 4	DESIGNATIONS
1	6CA	95 498 433	1		**RÉSERVOIR** BEHAELTER TANK DEPOSITO SERBATOIO
2	6CA	95 498 487	1	«JAEGER»	**RHÉOSTAT DE JAUGE** MESSRHEOSTAT GAUGE UNIT REOSTATO DE CABIDA REOSTATO MISURATORE
3	6CA	*75 498 387*	1	NFP ▶ 1/80	**SUPPORT DE RÉSERVOIR** TRAEGER F. BEHAELTER TANK BRACKET SOPORTE DEL DEPOSITO SUPPORTO SERBATOIO
	6CA	95 553 408	1	1/80 ▶	–
4	6CA	AY 175 247 A	1		**COLLERETTE** RING COLLAR COLLARIN COLLARINO
5	6AA	5 506 214	1		**BOUCHON INOX** ROSTFREIES STOPFEN STAINLESS CAP TAPON INOX TAPPO INOSSIDABILE
	6TT	ZC 9 866 056 U	1	«PJ»	– **ANTI-VOL AMOVIBLE** – MIT ABNEHB. VERSCHLUSS – WITH REMOVABLE LOCK – CON ANTIRROBO AMOV. – CON ANTIFURTO AMOV.
6	6CA	95 550 ?/*	1		– **PROTECTEUR** ABSCHIRMUNG PROTECTOR PROTECTOR PROTETTORE
7	6CA	95 548 894	1		**PLAQUE** PLATTE PLATE PLACA PLACCA
8	6AA	95 607 328		CC - 10 x 25 x 536	**BANDE** GUMMIBAND RUBBER STRAP FAJA NASTRO
9	6HA	5 412 295	3	4,5 x 8 x 0,5	**JOINT** DICHTUNG SEAL JUNTA GUARNIZIONE
10	6SM	5 402 981	1	30 x 55 x 2	–
11	9AZ	79 03 007 092	3	TCB 4 x 12	**VIS** SCHRAUBE SCREW TORNILLO VITE
12	9AY	*22 751 029*	3	NFP	–
13	1MA	79 03 001 708	1	TH 7 x 20	–
14	8VD	79 03 026 003	1	TR 5 x 16	–
15	9AS	79 03 101 770	5	TH 7 x 18	–
16	9AA	79 03 058 029	5	CO φ7 x 18	**RONDELLE** SCHEIBE WASHER ARANDELA RONDELLA

137

6-175-11

J-11

RÉSERVOIR D'ESSENCE (Suite)
BENZINBEHAELTER (Forts.)
PETROL TANK (Cont.)
DEPOSITO DE GASOLINA (Cont.)
SERBATOIO BENZINA (Cont.)

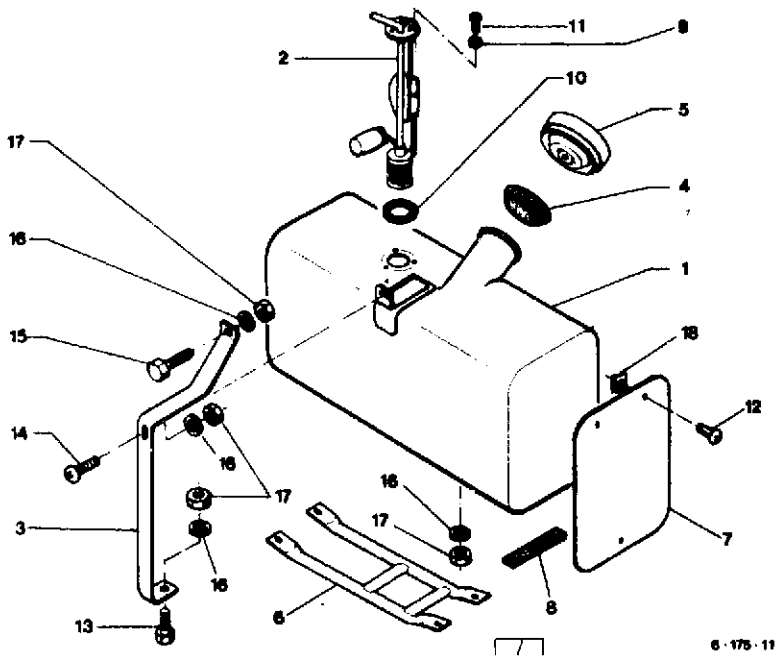

I	NUMEROS		K	4 x 4	DESIGNATIONS
17	2VO	79 03 032 036	5	HE 7 x 1,00	**ÉCROU** MUTTER NUT TUERCA DADO
18	7DA	26 159 879	3	CLIP	—

137

6-182-10

J-12

ÉCHAPPEMENT AVANT
AUSPUFFANLAGE, VORN
EXHAUST, FRONT
ESCAPE DELANTERO
SCARICO ANT.

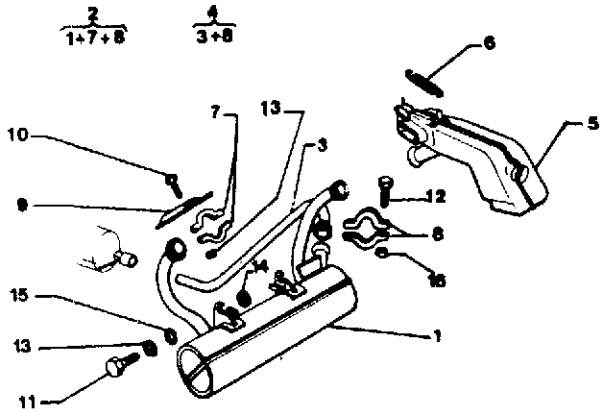

136

6-182-10

I	NUMEROS		K		DESIGNATIONS
1	6AM	AM 182 1 D RP 5 490 718	1	▶2/75	**POT DE DÉTENTE** VORSCHALLDAEMPFER EXPANSION CHAMBER DEPOSITO DE ESPANCION MARMITTA DI SCARICO
	6AA	5 465 334 RP 5 490 718	1	«CHESWICK AND WRIGHT» 2/75 ▶10/83	—
	6AA	5 490 718	1	«LUCHAIRE» 10/75 ▶	—
2	6AA	5 429 110 RP 75 527 203	1	ENS «PAM» ▶6/77	—
	6AA	75 527 203	1	ENS «PAM» «LU» 11/75 ▶	
3	6AA	AY 182 4	1		**TUBE INTERMÉDIAIRE** ZWISCHENROHR INTERMEDIATE PIPE TUBO INTERMEDIO TUBO INTERMEDIO
4	6AA	5 429 093	1	ENS «PAM»	—
5	6AA	95 548 494	1	G 6/81 ▶	**ÉCHANGEUR** WAERMETAUSCHER HEAT EXCHANGER CAMBIADOR DE CALOR SCAMBIATORE DI CALORE
	6AA	95 548 497	1	D 6/81 ▶	—
	6CA	95 545 412	1	G - 4 x 4 10/80 ▶	—
	6CA	95 545 413	1	D - 4 x 4 10/80 ▶	—
6	6AA	AY 9 182 230 A	2		**RESSORT** FEDER SPRING MUELLE MOLLA
7	6AM	75 420 467	8		**DEMI-COLLIER** SCHELLENHAELFTE HALF-CLAMP MEDIO-COLLAR SEMICOLLARE
8	6AM	AM 182 6 B	2		—
9	6AA	AM 182 257 A	1	3/78 ▶	**ÉCRAN THERMIQUE** ABSCHIRMUNG F. BREMSE THERMIC SCREEN F. BRAKE PANTALLA DE FRENO SCHERMO FRENO
10	9GX	23 747 019 NFP	8	TH 7 x 40	**VIS** SCHRAUBE SCREW TORNILLO VITE
11	9CA	23 719 319 - NFP	5	TH 7 x 20	—
12	9MA	79 03 101 757	2	TH 7 x 35	
13	9AA	22 904 019 NFP	2	COϕ 7,2x14,3 ▶ 7/71	**RONDELLE** SCHEIBE WASHER ARANDELA RONDELLA
	9AA	79 03 058 029	2	COϕ 7,2 x 18 7/71 ▶	—
14	9AA	79 03 053 374 NFP	2	CO 7,5 x 20 x 2 7/71 ▶	—
15	9MA	22 748 009 - NFP	2	8 x 24 x 2	—
16	9AA	79 03 032 249	14	HE 7 x 1,00 6/77 ▶	**ÉCROU** MUTTER NUT TUERCA DADO

ÉCHAPPEMENT ARRIERE
AUSPUFFANLAGE, HINTEN
EXHAUST, REAR
ESCAPE TRASERO
SCARICO POST.

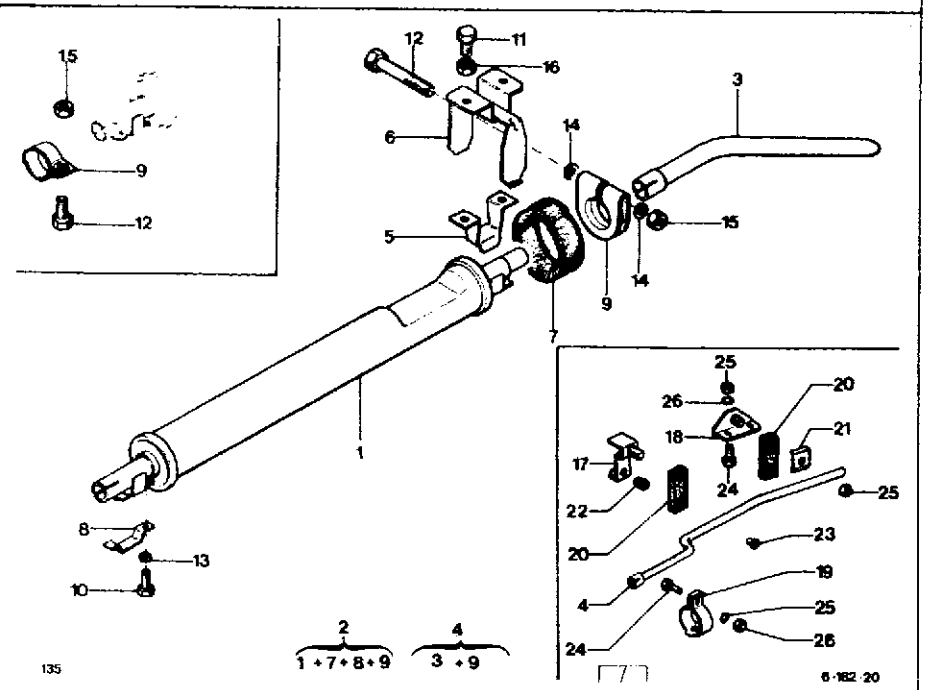

I	NUMEROS		K		DESIGNATIONS
1	6AA	*75 492 264* RP 95 495 446	1	«LU» 5/78 ▶3/82	**SILENCIEUX** NACHSCHALLDAEMPFER SILENCER SILENCIOSO SILENZIATORE
	6AA	95 495 446	1	«LU» 3/82 ▶	–
				DEO ▶ 6/77 1 - 75 510 651 1 - 24 420 019 2 - 22 541 019 1 - 26 211 089	
2	6AA	*5 429 096* RP 75 525 430	1	ENS «PAM» ▶ 6/77	–
	6AA	75 525 430	1	ENS «PAM» «LU» ▶11/75	–
3	6CA	75 510 645	1	AR 6/77 ▶ PMP - DEO 1 - 75 510 651 1 - 24 420 019 2 - 22 541 019 1 - 25 211 089	**TUBE** ROHR PIPE TUBO TUBO
4	6AA	75 518 014	1	ENS «PAM» 6/77 ▶	–
5	6CA	AY 182 122	2		**SUPPORT D'ANNEAU** TRAEGER F. RING RING BRACKET SOPORTE DE ANILLO SUPPORTO PER ANELLO
6	6AA	96 995 235	2		**PONTET AVEC GUIDE** STEG MIT FUEHRUNG BRIDGE WITH GUIDE SOPORTE CON GUIA SUPPORTO CON GUIDA
7	6AM	AM 183 48	2		**ANNEAU** RING RING ANILLO ANELLO
8	6AM	AM 183 88	2		**BRIDE D'ANNEAU** STEG F. RING RING CLAMP BRIDA DE ANILLO STAFFA PER ANELLO
9	6AY	AY 182 78	2	▶6/77	**COLLIER** SCHELLE COLLAR COLLAR COLLARE
	6AA	79 03 083 237	2	7/84 ▶	–
10	9TT	*79 03 101 282* RP 79 03 201 130	2	TH 5 x 14	**VIS** SCHRAUBE SCREW TORNILLO VITE
11	9TT	*23 719 019*	2	TH 7 x 20 - NFP	–
12	9TT	*23 720 319*	2	TH 7 x 25 - NFP ▶6/77	–
	9AA	79 03 001 846 NFP	2	TH 8 x 65-6/77 ▶7/84	–
13	9TT	79 03 056 005	2	CR ⌀5,2 x 9,4	**RONDELLE** SCHEIBE WASHER ARANDELA RONDELLA
14	9AA	22 541 019	?	8 x 15 x 22 6/77 ▶7/84	–

ÉCHAPPEMENT ARRIERE (Suite)
AUSPUFFANLAGE, HINTEN (Forts.)
EXHAUST, REAR (Cont.)
ESCAPE TRASERO (Cont.)
SCARICO POST. (Cont.)

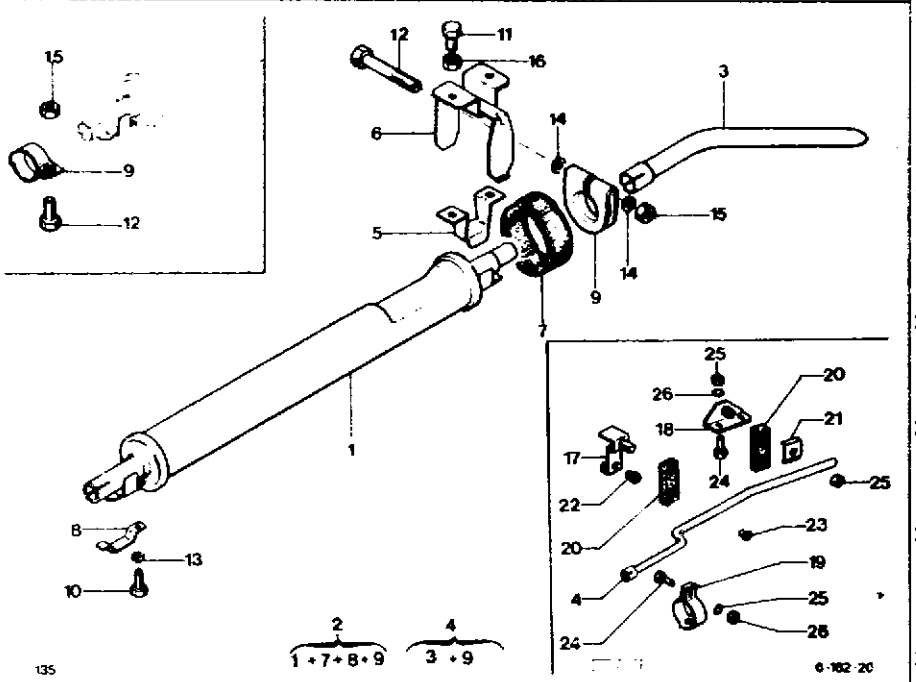

I	NUMEROS		K		DESIGNATIONS
15	9AA	79 03 032 249	2	HE 7 x 1,00	**ÉCROU** MUTTER NUT TUERCA DADO
	9AA	79 03 232 031	2	HE 8 x 1,25-6/77	–
16	9TT	79 03 032 036	7 5	HE 7 x 1,00	–

				(CH) (i)		PIECES SPÉCIALES SPEZIALTEILE SPECIAL PARTS PIEZAS ESPECIALES PEZZI SPECIALI
3	6CA	75 510 646	1	AR - RMP DEO 1 - 75 510 651	6/77 ▶	**TUBE** ROHR PIPE TUBO TUBO
4	6AA	*5 429 103*	1	ENS - «PAM»	▶ 6/77	–
	6AA	75 525 427	1	NFP ENS - «PAM»	6/78 ▶	–
17	6AK	5 503 759	1			**SUPPORT DE TUBE** TRAEGER F. ROHR PIPE BRACKET SOPORTE DE TUBO SUPPORTO PER TUBO
18	6AY	AYA 182 68	1	AR		–
19	6AY	AY 182 101	2		6/69 ▶	**COLLIER** SCHELLE COLLAR COLLAR FASCETTA
20	1AM	5 410 471	2			**BANDE ÉLASTIQUE** GUMMISTUECK FLEXIBLE BLOCK BLOQUE ELASTICO BLOCCHETTO FLESSIBILE
21	6AM	AM 182 84	2	AR	9/69 ▶	**PLAQUETTE DE SERRAGE** BEFESTIGUNGSLASCHE CLAMPING PLATE PLAQUETA DE APRIETE PLACCHETTA DI FISSAGGIO
22	6AA	75 416 420	2		▶ 4/69	**BUTÉE ANTI-BRUIT** ANSCHLAGSTUECK STOP TOPE REGGISPINTA
	6AM	AM 182 285 A	2			–
23	6DA	5 410 472	4			**ENTRETOISE** ABSTANDSSTUECK SPACER SEPARADOR DISTANZIALE
24	9GX	95 623 773	4	TH 7 x 25	9/69 ▶	**VIS** SCHRAUBE SCREW TORNILLO VITE
25	1VD	79 03 056 012	4	AR - ϕ 72 x 18,2	9/69 ▶	**RONDELLE** SCHEIBE WASHER ARANDELA RONDELLA
26	9TT	79 03 032 071	4	HE 7 x 1,00		**ÉCROU** MUTTER NUT TUERCA DADO

REFROIDISSEMENT MOTEUR
MOTORKUEHLUNG
ENGINE COOLING
REFRIGERACION DE MOTOR
RAFFREDDAMENTO DEL MOTORE

6-242-10

J-15 →

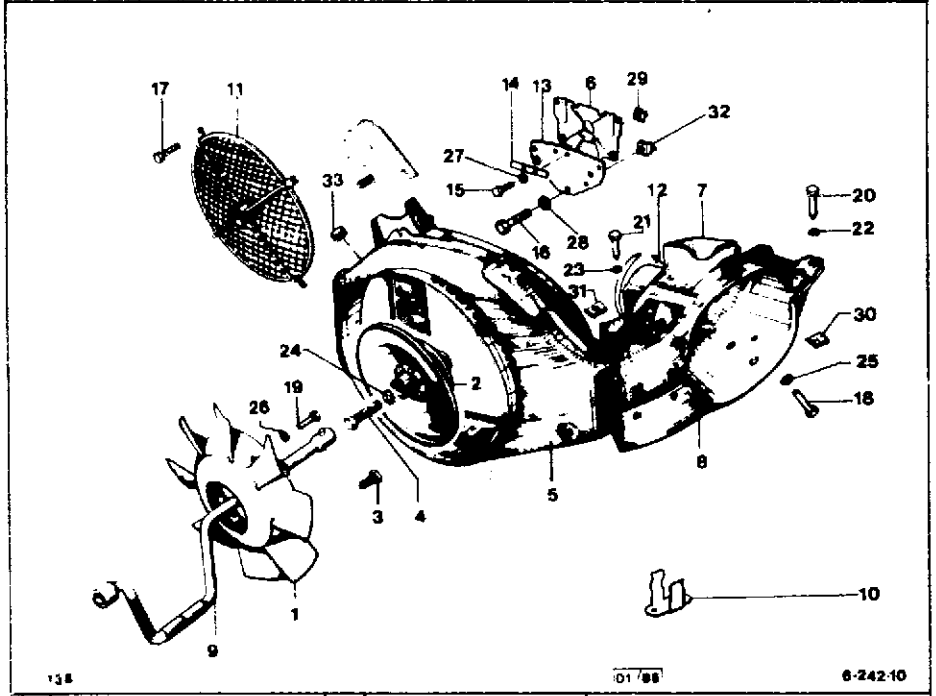

138 01/88 6-242-10

I	NUMEROS		K		DESIGNATIONS
1	6AM	AM 241 1	1	▶ 9/70	**VENTILATEUR 8 PALES** GEBLAESERAD (8 BLAETTER) EIGHT-BLADE FAN VENTILADOR DE 8 ASPAS VENTOLA A 8 PALE
	6AY	*75 510 956* RP 75 515 916	1	3/73 ▶	**VENTILATEUR 9 PALES** GEBLAESERAD (9 BLAETTER) NINE-BLADE FAN VENTILADOR DE 9 ASPAS VENTOLA A 9 PALE

2	6AA	5 508 141	1	2o - 7 ϕ 7,75 - 3ϕ 5,75	**POULIE** RIEMENSCHEIBE PULLEY POLEA PULEGGIA
3	6AM	75 420 175	3	TH 7 x 22	**VIS** SCHRAUBE SCREW TORNILLO VITE
4	9TT	95 499 045	1	TH 10 x 36	—
4					
5	6AZ	75 523 580	1	▶ 7/77 RMP DEO - 75 513 509	**COLLECTEUR** LUFTFUEHRUNG AIR INTAKE COLECTOR CONVOGLIATORE ARIA
	6CA	75 524 109	1	7/78 ▶	—
6	6RB	*75 478 958* RP 95 607 711	1	▶ 12/82	**TOLE D'ÉTANCHÉITÉ** ABDICHTBLECH CLOSING PANEL CHAPA DE ESTANQUEIDAD LAMIERA DI TENUTA
7	6RB	5 478 995	1	SUP D 10/75 ▶	**CONDUIT** KUEHLSCHACHT CASING CONDUCTO CONDOTTO
	6RB	5 478 994	1	SUP G 9/69 ▶	—
8	6RB	75 478 985	1	INF G 9/69 ▶	—
	6RB	75 478 986	1	INF D 9/69 ▶	—
9	6AA	A 251 1 A	1		**MANIVELLE** ANDREHKURBEL STARTING HANDLE MANIVELA MANOVELLA
10	1AY	5 413 580	2		**AGRAFE** KLAMMER CLIP GRAPA GRAFFETTA
11	6AK	AK 251 87 A	1		**GRILLE** SCHUTZGRILL GRILLE REJILLA GRIGLIA
12	3GX	26 142 139 RP 79 03 085 034	2		**FLECHE ANTI-BRUIT** SCHELLE RUBBER STRAP COLLAR FASCETTA
13	6AA	95 544 253	1	12/79 ▶	**FLASQUE** FLANSCH FLANGE CAUCHO FLANGIA
	6AA	95 573 482	1	12/82 ▶	—

REFROIDISSEMENT MOTEUR (Suite)
MOTORKUEHLUNG (Forts.)
ENGINE COOLING (Cont.)
REFRIGERACION DE MOTOR (Cont.)
RAFFREDDAMENTO DEL MOTORE (Cont.)

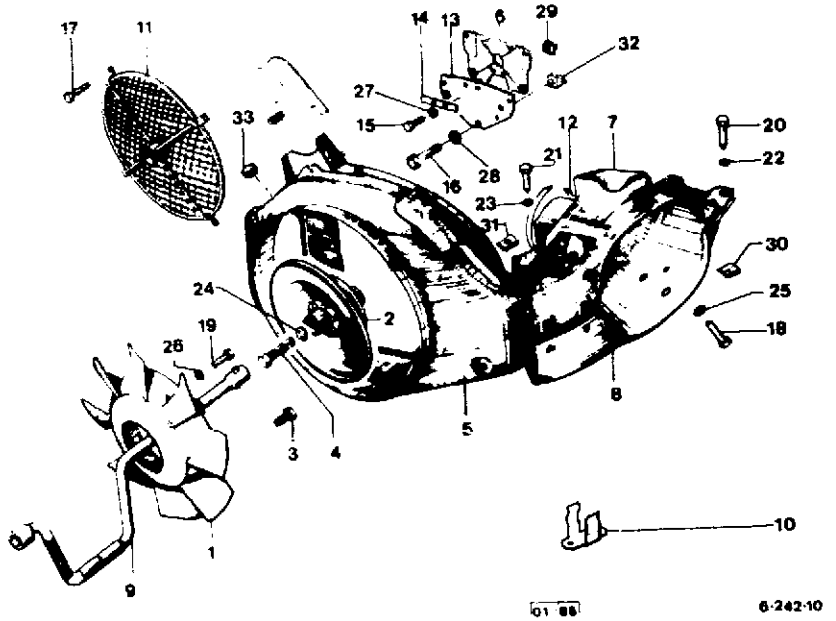

138

I		NUMEROS	K			DESIGNATIONS
14	6AM	75 521 631	1	NFP	▶ 12/79	**BARRETTE** STAB BAR BARRETA BARRETTA
	6AA	95 573 483	2		12/82 ▶	–
15	9AZ	ZD 9 029 530 U RP 79 03 209 130	10 2	TH 5×16	▶ 7/70	**VIS** SCHRAUBE SCREW TORNILLO VITE
	9GX	79 03 201 130	13 12	TH 5×14 7/70 ▶ 2780 TH 5×14 2781 ▶		–
16	9TT	79 03 201 129	1	TH 5×0,80-12-2781 ▶		–
17	9SM	79 03 101 752	4	TH 7×12		–
18	9TT	79 03 101 770	4	TH 7×18		–
19	6TT	26 139 009	3	TH 5×20		–
20	9AY	79 03 016 283	14	TR 4,85×12,7		–
21	9GX	79 03 101 282 RP 79 03 201 130	4	TH 5×14		–
22	9TT	79 03 056 005	2	CR Ø 5,2×9,4 ▶ 7/70		**RONDELLE** SCHEIBE WASHER ARANDELA RONDELLA
	9AA	79 03 058 027	4		7/70 ▶	–
23	9TT	79 03 053 390	2	CR Ø 7,5×14		–
24	9TT	79 03 056 017	1	CR Ø 10,5×17		–
25	9TT	79 03 058 011	4	CO Ø 7,2×14,2		–
26	9TT	79 03 055 019	3			–
27	6AA	22 770 069	2	Ø 5×14	12/82 ▶	–
28	9AA	79 03 058 038	1	CO Ø 5 - NFP - 2781 ▶		–
29	8TT	ZC 9 615 825 W RP 26 158 259	5	CLIP		**ECROU** MUTTER NUT TUERCA DADO
	6SM	ZC 9 615 859 U	4	CLIP 5×0,80	12/82 ▶	–
30	7AZ	79 03 046 037	14	CLIP Ø 4,85		–
31	6AA	79 03 046 036		CLIP		–
32	2TT	26 158 259	3	CAGE 5×0,80-12/82 ▶		–
33	7MA	26 130 489	1		6/80 ▶	**OBTURATEUR** STOPFEN PLUG OBTURADOR OTTURATORE
	6GX	AM 251 298 A	1	4×4		**GUIDE MANIVELLE** FUEHRUNG F. ANDREHKURBEL STARTING HANDLE GUIDE GUIA MANIVELA GUIDA MANOVELLA
				ARMÉE		**PIECES SPECIALES**
5	6CA	5 418 257	1	NFP	▶ 7/77	**COLLECTEUR**
	6CA	75 524 113	1		7/78 ▶	–
13	6CA	95 544 484	1	CC - NFP	12/79 ▶	**FLASQUE**
14	6CA	75 520 856	1	10/78	▶ 12/79	**BARRETTE**

137

6-242-10

K-14 ↓

REFROIDISSEMENT MOTEUR (Suite)
MOTORKUEHLUNG (Forts.)
ENGINE COOLING (Cont.)
REFRIGERACION DE MOTOR (Cont.)
RAFFREDDAMENTO DEL MOTORE (Cont.)

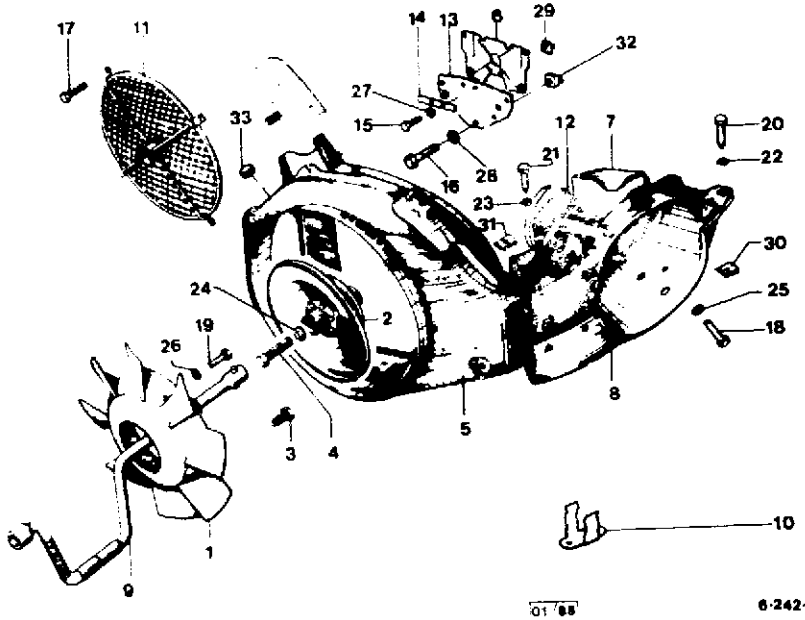

135

I	NUMEROS		K		DESIGNATIONS
					PIECES SPECIALES SPEZIALTEILE SPECIAL PARTS PIEZAS ESPECIALES PEZZI SPECIALI
	6AA	AY 242 66	2	INF - (D)	**DEMI-COQUILLE** SCHACHTHAELFTE HALF-CASING MEDIO-CONDUCTO SEMICONDOTTO
	6AA	AY 242 67	2	SUP - (D)	–

7CA	ZC 9 618 792 U	4	«POP» (I)	9/69 ▶	**RIVET** NIET RIVET REMACHE RIVETTO

137

6-615-10

K-13

PARE-CHOCS
STOSSSTANGE
BUMPER
PARACHOQUES
PARAURTI

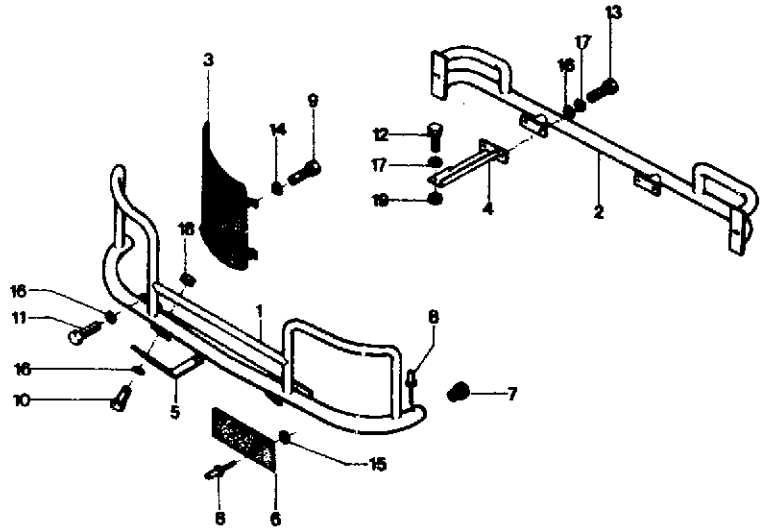

135

6-615-10

I	NUMEROS		K	4×4	DESIGNATIONS
1	6CA	95 550 766	1	AV 12/79 ▶	**PARE-CHOCS** STOSSSTANGE BUMPER PARACHOQUES PARAURTI
2	6CA	95 538 493	1	AR	–
3	6CA	95 538 483	1	AV G	**GRILLE DE PROTECTION** SCHUTZGITTER PROTECTION GRILLE REJILLA PROTECCION GRIGLIA PROTEZIONE
	6CA	95 538 482	1	AV D	–
4	6CA	95 550 768	1	AR G 4/80 ▶	**CONTRE-LAME** GEGENBLECH COUNTER PIECE CONTRA CHAPA CONTRO LAMIERA
	6CA	95 550 767	1	AR D 4/80 ▶	–
5	6CA	95 550 765	2	AV 12/79 ▶	**TIRANT** STREBE BRACKET TIRANTE TIRANTE
6	6CA	95 538 485	2	CC - AV	**BAVETTE** SCHMUTZFAENGER MUD-FLAP FALDILLA PARASPRUZZI
7	6CA	95 538 484	2	AV	**OBTURATEUR** STOPFEN PLUG TAPON TAPPO
8	7CA	26 187 959	8		**RIVET** NIET RIVET REMACHE RIVETTO
9	9SM	77 03 001 806	8	TH 5×16 - NFP	**VIS** SCHRAUBE SCREW TORNILLO VITE
10	9CA	23 719 319 RP 79 03 101 771	4	TH 7×20	–
11	9TT	23 720 319	4	TH 7×25 - NFP	–
12	1VD	79 03 001 082 RP 79 03 101 806 DEO1-79 03 057 003	8	TH 7×30	–
13	1MA	79 03 001 708	6	TH 7×20	–
14	1GX	79 03 057 059	8	CO Ø 5	**RONDELLE** SCHEIBE WASHER ARANDELA RONDELLA
15	9DA	22 770 069	6	Ø 5×12	–
16	9AA	79 03 058 029	14	CR Ø 7×18	–
17	9DA	79 03 058 011	20	CO Ø 7	–
18	1VD	79 03 032 012 RP 79 03 032 036	4	HE 7×1,00	**ECROU** MUTTER NUT TUERCA DADO
19	9TT	79 03 032 036	8	HE 7×1,00	–

137

6-644-10

K-12

COMMANDE DE CHAUFFAGE – DÉGIVRAGE
BETAETIGUNG DER HEIZUNG UND DER ENTFROSTUNG
HEATING AND DEFROSTING CONTROLS
MANDOS DE CALEFACCION Y DE ANTI-HIELO
COMANDI RISCALDAMENTO E SBRINATURA

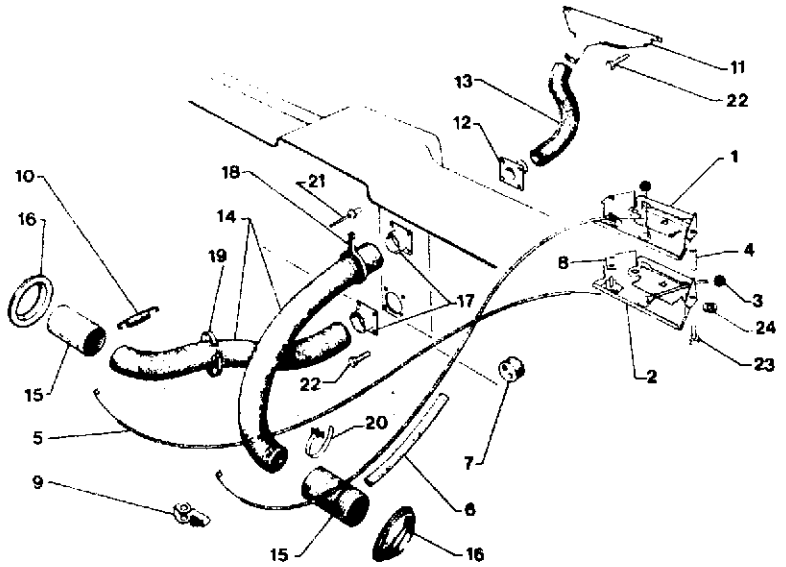

135 6-644-10

I	NUMEROS		K	▶ 10/70	DESIGNATIONS
1	6AK	*AK 644 17*	2	NFP	**COMMANDE DE DÉGIVRAGE** ENTFROSTUNGSBETAETIGUNG DEFROSTING CONTROL MANDO DE ANTIHIELO COMANDO SBRINATURA
2	6AA	5 403 748			**SUPPORT DE COMMANDE** BETAETIGUNG OHNE ZUG CONTROL W/O CABLE, A. KNOB MANDO SIN CABLE NI BOLA COMANDO SENZA CAVO NE POM.

3	6TT	95 412 362 FXX	2	7/79 ▶	**BOULE** KNOPF KNOB BOLA POMELLO
4	7CA	ZC 9 298 748 U	2	9 x 38	**ENTRETOISE** ABSTANDSTUECK SPACER SEPARADOR DISTANZIALE
5	6AK	AK 644 94	2	LON 1400	**CABLE DE COMMANDE** BETAETIGUNGSZUG CONTROL CABLE CABLE DE MANDO CAVO DI COMANDO
6	6AY	5 470 318	1	5 x 11 x 250	**GAINE** HUELLE SHEATH FUNDA GUAINA
7	5AA	5 443 169	1		**PROTECTEUR** SCHUTZSTUECK PROTECION PIECE PROTECTOR PROTETTORE
8	6AA	95 544 348	1		**BRIDE** HALTELASCHE CLAMP BRIDA STAFFA RITEGNO
9	6AM	AM 644 103 A	3		**AGRAFE** KLAMMER CLIP GRAPA GRAFFETTA
10	6AA	AY 9 182 230 A	2	7/69 ▶	**RESSORT DE RAPPEL** RUECKHOLFEDER RETURN SPRING MUELLE DE RETROCESO MOLLA DI RICHIAMO
11	6AY	AY 564 205 A NFP	1		**BUSE D'ÉTALEMENT** AUSGANGDUESE NOZZLE BOCA DIFFUSORE
12	6AY	*AY 564 280 A*	1	NFP	**MANCHON PLASTIQUE (GRIS)** PLASTIK-ANSCHLUSS (GRAU) PLASTIC SOCKET (GREY) TOMA DE PLASTICO (GRIS) PRESA DI PLASTICA (GRIGIA)
13	6AY	AY 564 297 A NFP	1	ϕ INT 35 - LON 270	**CONDUIT** LEITUNG DUCT CONDUCTO CONDOTTO
14	6AY	*AY 543 202 A*	1	G - LON 500 - NFP	–
	6AY	AY 643 201 A	1	D - LON 360	–
15	6AY	AY 643 144 A	2		–

COMMANDE DE CHAUFFAGE – DÉGIVRAGE (Suite)
BETAETIGUNG DER HEIZUNG UND DER ENTFROSTUNG (Forts.)
HEATING AND DEFROSTING CONTROLS (Cont.)
MANDOS DE CALEFACCION Y DE ANTI-HIELO (Cont.)
COMANDO RISCALDAMENTO E SBRINATURA (Cont.)

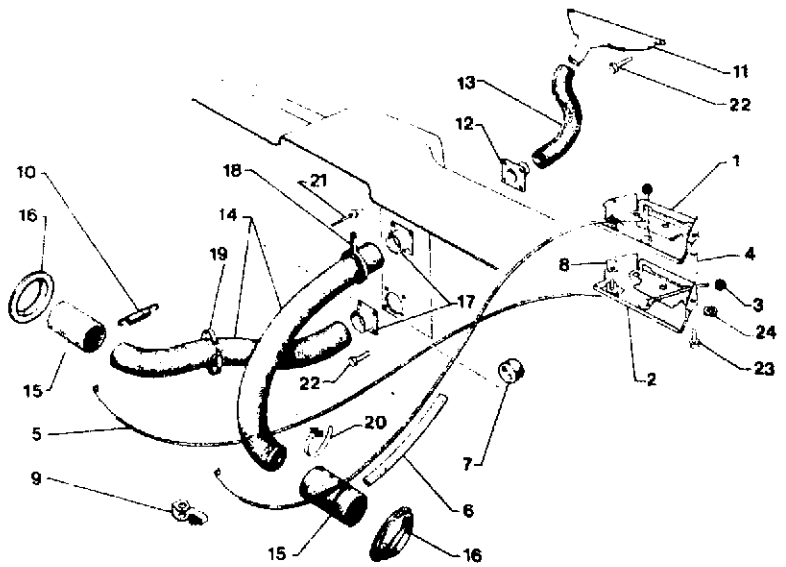

135 6-6 44-10

I	NUMEROS		K	▶ 10/70	DESIGNATIONS
16	6AY	AY 643 155	2		**SUPPORT DE CONDUIT** TRAGRING F. LEITUNG DUCT SUPPORT RING SOPORTE DE CONDUCTO SUPPORTO PER CONDOTTO
17	6AY	*AY 643 131 A*	2	«201» - NFP	**PRISE DE CHAUFFAGE** WARMLUFTANSCHLUSS HEATING SOCKET TOMA DE CALEFACCION PRESA DI RISCALDAMENTO
	6AY	*AY 643 132 A*	2	«405» - NFP	–
	6AY	*AY 643 133 A*	2	«808» - NFP	–
		AY 643 203 A	2	«508» - NFP	–
18	6AY	*AY 643 106*	1	NFP	**COLLIER** SCHELLE COLLAR COLLAR COLLARE
19	3DA	26 142 289	1		–
20	9AA	79 03 083 271	4	LON 600	–
21	7CA	26 187 959	10	«POP» 7/70 ▶	**RIVET** NIET RIVET REMACHE RIVETTO
22	9TT	79 03 201 511 NFP	2	TH 5 x 12	**VIS** SCHRAUBE SCREW TORNILLO VITE
	9DA	*ZD 9 028 400 U*	4	TH 5 x 20-NFP ▶ 7/70	–
	9AZ	79 03 201 130	4	TH 5 x 16 ▶ 7/70	–
23	9DA	ZD 9 029 400 W	2	TH 5 x 45 - NFP	–
24	9TT	22 770 069	9	5,5 x 12 x 1	**RONDELLE** SCHEIBE WASHER ARANDELA RONDELLA

137

COMMANDE DE CHAUFFAGE – DÉGIVRAGE
BETAETIGUNG DER HEIZUNG UND DER ENTFROSTUNG
HEATING AND DEFROSTING CONTROLS
MANDOS DE CALEFACCION Y DE ANTI-HIELO
COMANDI RISCALDAMENTO E SBRINATURA

6-644-10-A

K-10

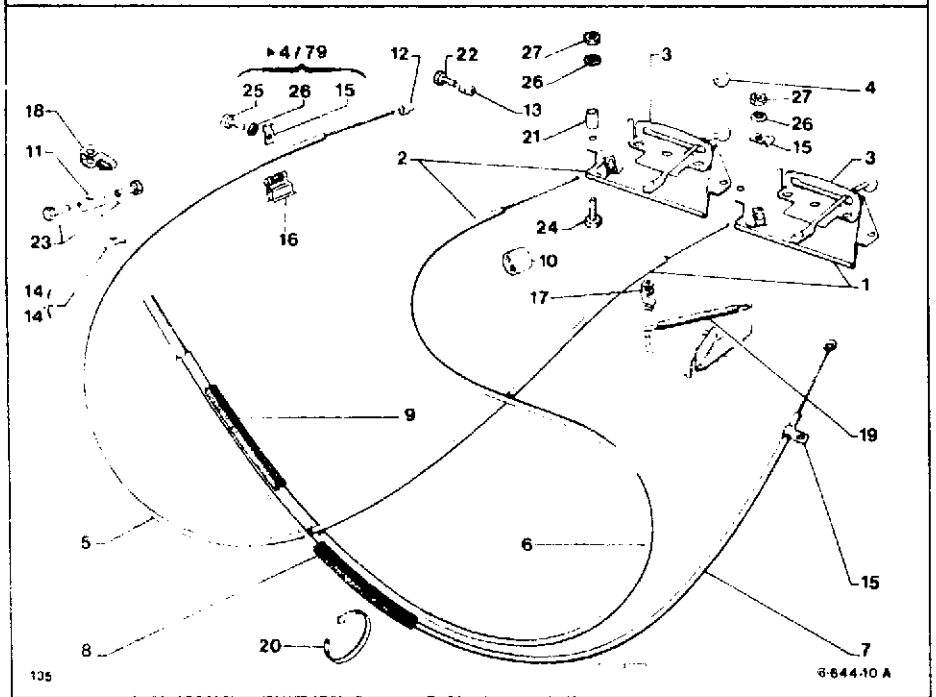

I	NUMEROS		K	10/70 ▶	DESIGNATIONS
1	6AA	5 403 748	1	RMP DEO - 5 405 570 ZC 9 619 894 U 4/71 ▶ 4/73	**COMMANDE SUR BOITIER** BETAETIGUNG AM GEHAEUSE CONTROL CON CASING MANDO SOBRE CAJA COMANDO SULLA SCATOLA
	6CA	95 546 590	1	4 x 4 9/80 ▶	–
2	6AK	*AK 644 17*	1	NFP ▶ 4/72	**COMMANDE SUR ÉCHANGEUR** BETAETIGUNG AM TAUSCHER CONTROL ON EXCHANGER MANDO SOBRE CAMBIADOR COMANDO SU CAMBIATORE
	6AA	5 403 748	1	4/72 ▶ 3/81	–
	6CA	95 557 989 RP 95 624 996 DEO 1-95 557 784	1	3/81 ▶	–
	6CA	95 546 589	1	4 x 4 9/80 ▶	–

I	NUMEROS		K	10/70 ▶	DESIGNATIONS
3	6AA	*AZU 644 113*	1	NFP ▶ 4/73	**SUPPORT** BETAETIGUNG CONTROL SOPORTE SUPPORTO
	1AA	5 403 748	2	4/73 ▶ 3/81	–
	6CA	95 624 996	2	3/81 ▶	–
4	6AA	95 412 362 FXX	2	7/79 ▶	**BOULE** KNOPF KNOB BOLA POMELLO
5	6AM	AM 644 94 C	1	▶ 4/71	**CABLE** ZUG CABLE CABLE CAVO
	3CA	*5 405 570*	1	NFP 4/71 ▶ 4/73	–
	6CA	5 427 779	1	7/73 ▶	–
6	6AK	AK 644 94	1	▶ 7/73	–
	6CA	95 557 784	1	LON 1400 3/81 ▶	–
				DEO 1 - 5 441 571	
7	6AY	AY 644 94 C	1	▶ 4/72	–
	2AA	*5 411 268*	1	NFP 4/72 ▶ 9/78	
	6CA	95 557 785	1	LON 965 3/81 ▶	–
	6CA	95 552 519	1	4 x 4 9/80 ▶	–
8	1CA	5 420 291	1	5 x 11 - LON 350	**GAINE** HUELLE SHEATH VAINA GUAINA
9	1AM	75 420 476	1	5 x 11 - LON 120	–
10	1DA	5 443 169	1	ϕ 2 7/73 ▶	**PROTECTEUR** SCHUTZHUELSE PROTECTION BUSH PROTECTOR PROTEZIONE
11	6AA	AZU 644 101	2	ϕ 4 x 0,75 ▶ 2/81	**TOURILLON** KLEMMSTUECK CLAMPING PIECE BLOQUILLO DE APRIETA BLOCCHETTO
	6AA	95 568 857	2	ϕ 4 x 0,70 2/81 ▶	–
12	1CA	5 401 320	1		**ARRET DE GAINE** HUELLENANSCHLAG SHEATH STOP RETEN DE VAINA FERMAGUAINA
13	1AA	75 413 304	1		**BARILLET** SEILKLEMME CABLE TRUNNION BARRILETE BARILETTO
14	6AA	95 544 348	1 1	G G	**BRIDE** HALTELASCHE CLAMP BRIDA STAFFA
15	6RB	5 441 571	2	▶ 7/73	–

137 COMMANDE DE CHAUFFAGE – DÉGIVRAGE (Suite)
BETAETIGUNG DER HEIZUNG UND DER ENTFROSTUNG (Forts.)
6-644-10-A HEATING AND DEFROSTING CONTROLS (Cont.)
MANDOS DE CALEFACCION Y DE ANTI-HIELO (Cont.)
K-09 COMANDI RISCALDAMENTO E SBRINATURA (Cont.)

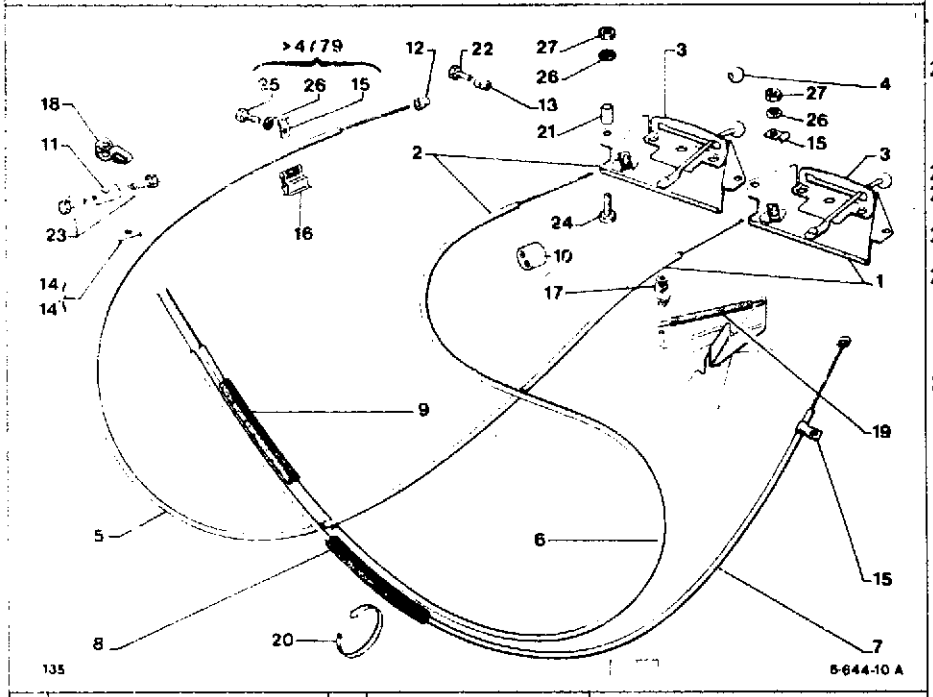

i	NUMEROS		K		10/70 ▶	DESIGNATIONS
14	6TT	ZC 9 619 894 U	3 2		4/72 ▶ 10/77 7/73 ▶	**AGRAFE** KLAMMER CLIP GRAPA GRAFFETTA
15	6RB	5 441 571	1	D	10/77 ▶	–
16	6GX	26 198 979	1			–
17	6AM	AM 644 103 A	1	G		–
18	6AA	95 602 700	1	D		–
19	6AA	AY 9 182 230 A	2			**RESSORT** FEDER SPRING MUELLE MOLLA
20	1DA	26 142 179 **NFP**	1			CC	**COLLIER** SCHELLE COLLAR COLLAR FASCETTA
21	7CA	ZC 9 298 748 U	2				**ENTRETOISE** ABSTANDSSTUECK SPACER SEPARADOR DISTANZIALE
22	5AA	5 419 954	1				**VIS** SCHRAUBE SCREW TORNILLO VITE
23	2AM	26 210 689	2			TH 4 x 7	–
24	9AY	79 03 201 018	2			TH 5 x 45	–
25	9GX	79 03 201 012	1			TH 5 x 14	–
26	9AA	79 03 058 027	3			φ 5,1 x 12	**RONDELLE** SCHEIBE WASHER ARANDELA RONDELLA
27	9TT	79 03 032 006	4			HE 5 x 0,80	**ÉCROU** MUTTER NUT TUERCA DADO

137
6-644-20
K-08

BOITIER DE CHAUFFAGE – AÉRATEUR – CONDUIT
HEIZUNGSGEHAEUSE – BELUEFTER – LEITUNG
HEATING CASING – VENTILATION OUT-LET – DUCT
CAJA DE CALEFACCION – AIREADOR – CONDUCTO
SCATOLA RISCALDAMENTO – AERATORE – CONDOTTO

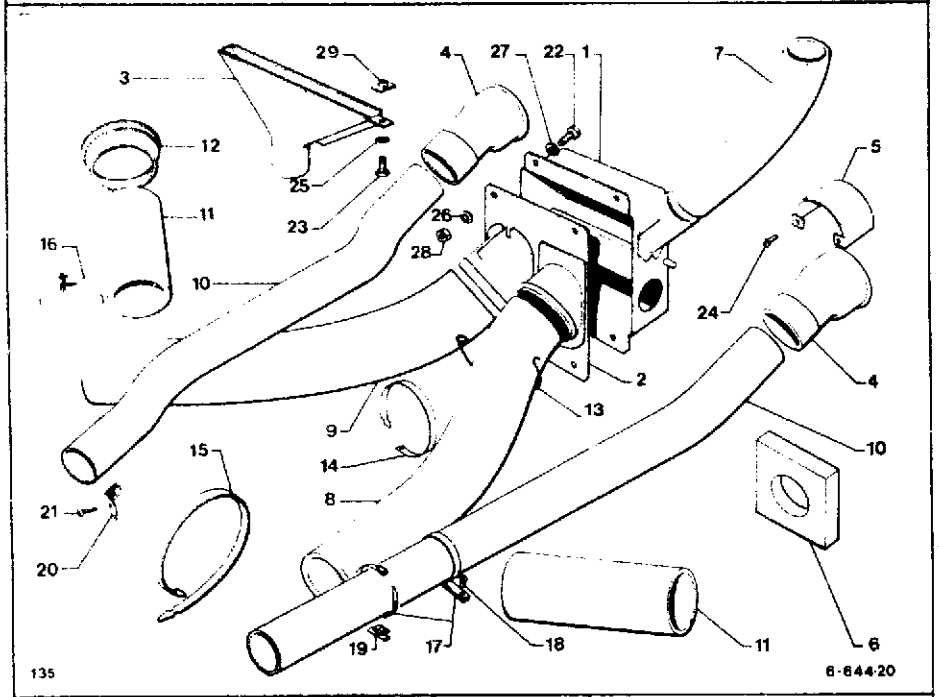

I	NUMEROS		K	10/70 ▶		DESIGNATIONS
1	6CA	*5 400 879*	1	NFP	▶10/72	**BOITIER CHAUFFAGE** HEIZUNGSGEHAEUSE HEATING CASING CAJA DE CALEFACCION SCATOLA RISCALDAMENTO
	6CA	95 532 933	1	TT	4/79▶	–
2	6CA	75 529 229	1		4/79▶	**COUVERCLE ASSEMBLÉ** DECKEL, INSGESAMT COVER ASSY TAPA UNIDA COPERCHIO ASSIEMATO
3	6AY	AY 564 205 A NFP	1		▶10/72	**BUSE** ENTFROSTUNGSDUESE DEFROSTING NOZZLE BOCA DE ANTIHIELO DIFFUSORE SBRINATURA
	6CA	5 418 104	1	ARMÉE TT	▶10/72 10/72 ▶	–
4	6SM	5 407 674	2	G - D		**AÉRATEUR** BELUEFTER VENTILATION OUT-LET AIREADOR AERATORE
5	6CA	AY 643 235 A	2			**ÉTRIER** HALTEBLECH F. BELUEFTER VENTILATION OUT-LET CLAMP SUJETADOR DE AIREADOR LAMIERA RITEGNO AERATORE
6	1CA	5 405 274		100 x 100 - E 15 ϕ INT 40		**JOINT** DICHTUNGSSTUECK SEALING PIECE JUNTA GUARNIZIONE
7	6CA	5 400 886	1	40 x 44 x 300	▶10/72	**CONDUIT SOUPLE** BIEGSAMES ROHR FLEXIBLE DUCT CONDUCTO FLEXIBLE CONDOTTO FLESSIBILE
	6CA	*5 418 108*	1	45 x 49 x 360 NFP 10/72	▶11/72	–
	6CA	5 436 251	1	45 x 49 x 400	11/72 ▶	–
8	6CA	5 400 884	1	G - 550	▶ 6/78	–
	6CA	75 525 979	1	G	6/78 ▶	–
9	6CA	5 400 885	1	D - 500		–
10	6AY	AY 643 236 A	2	ϕ 46 x 50 - LON 1130		–
	6CA	95 547 231	2	4 x 4	9/80 ▶	–
11	6AM	AM 643 144 A	2			–
12	6AY	AY 643 155	2			**SUPPORT** TRAEGRING SUPPORT RING SOPORTE SUPPORTO
13	6CA	75 525 957	1		6/78 ▶	–
	6CA	95 545 062	1	4 x 4	9/80 ▶	–
14	3DA	*26 142 299*	1	G - NFP		**COLLIER** SCHELLE COLLAR COLLAR COLLARE
	4GX	26 142 289	1	D		–
15	6CA	26 142 269	2	LON 210		–
16	9AA	79 03 083 271	4	LON 605		–
17	6CA	*ZC 9 614 157 U* RP 79 03 085 045	2	ϕ 60	4/71 ▶	–
18	7CA	ZC 9 618 792 U	2			**RIVET** NIET RIVET REMACHE RIVETTO

137 **BOITIER DE CHAUFFAGE - AERATEUR - CONDUIT (Suite)**
HEIZUNGSGEHAEUSE - BELUEFTER - LEITUNG (Forts.)
6–644–20 HEATING CASING - VENTILATION OUT-LET - DUCT (Cont.)
K–07 ↓ CAJA DE CALEFACCION - AIREADOR - CONDUCTO (Cont.)
SCATOLA RISCALDAMENTO - AERATORE - CONDOTTO (Cont.)

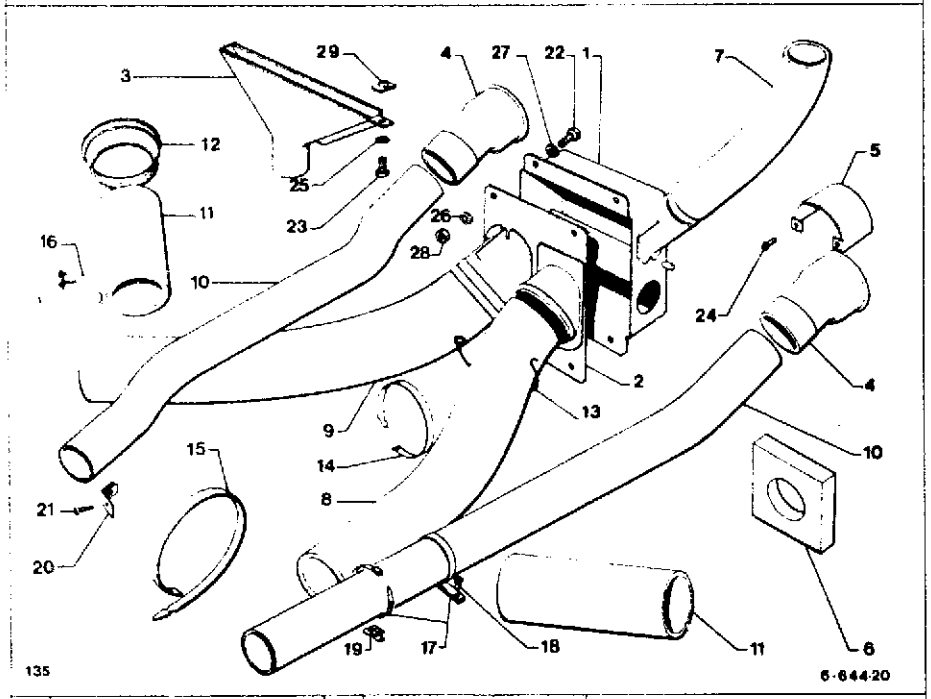

I	NUMEROS		K	10/70 ▶	DESIGNATIONS
19	6CA	ZC 9 614 158 U	2		**CLIP** CLIP CLIP CLIP GRAFFETTA
20	7TT	ZC 9 619 829 U	2		**AGRAFE** KLAMMER CLIP GRAPA GRAFFETTA
21	9TT	79 03 016 414	2	TFB 4,85	**VIS** SCHRAUBE SCREW TORNILLO VITE
22	9AA	79 03 201 129	4	TH 5×12	–
	9MA	79 03 201 013	4	TH 5×20	–
23	9TT	79 03 201 011	2	TH 5×12	–
	9TT	22 138 019	2	TFB 3,52×12,7 - NFP	–
24	6CA	26 136 939	2	TCB 4×12	–
25	9AA	22 768 019	2	4,25×12×1 - NFP	**RONDELLE** SCHEIBE WASHER ARANDELA RONDELLA
26	9AA	79 03 058 027	4	CO 5,1×122×1,25 ▶ 4/79	–
	9TT	79 03 056 005	4	CR Ø 5 4/79 ▶	–
27	9DA	22 770 069	8	CO Ø 5,1×12 4/79 ▶	–
28	9TT	79 03 032 006	4	HE 5×0,80	**ECROU** MUTTER NUT TUERCA DADO
29	7TT	26 159 879	2	CLIP	–

137

6-644-30

K-06 ↓

PALONNIER DE COMMANDE
BETAETIGUNGSSCHWENBEL
CONTROL ROCKING LEVER
BALANCIN DE MANDO
BILANCINO DI COMANDO

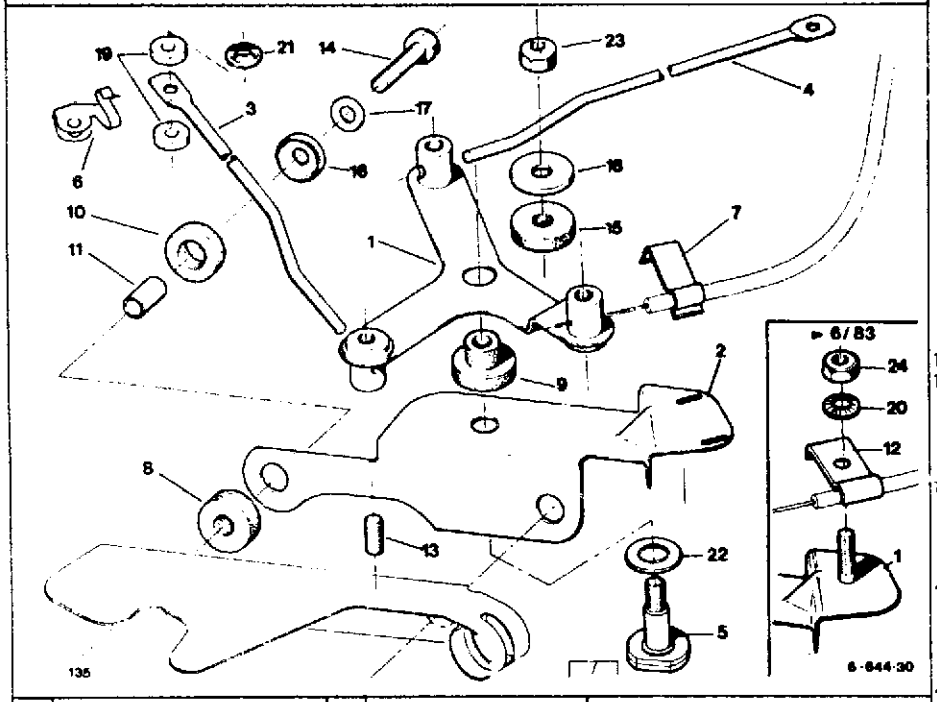

1	NUMEROS		K	4 x 4	DESIGNATIONS
1	6VD	5 508 476	1		**PALONNIER** BETAETIGUNGSSCHWENGEL ROCKING LEVER BALANCIN BILANCINO
2	6VD	75 513 429	1	► 6/83	**SUPPORT** TRAEGER BRACKET SOPORTE SUPPORTO
	6VD	95 593 233	1	6/83 ►	–

3	6VD	5 508 482	1			**TRINGLE** GESTAENGE ROD VARILLA ASTA
4	6VD	5 508 483	1			–
5	6VD	5 508 481	1			**AXE** ACHSE PIN EJE PERNO
6	6AY	95 602 702	1	G		**AGRAFE** KLAMMER CLIP GRAPA GRAFFETTA
	6AM	95 602 700	1	D		–
7	6VD	79 03 076 996	1		6/83 ►	–
8	1DA	5 416 808	2			**BAGUE** RING BUSH CASQUILLO BOCCOLA
9	6VD	5 508 479	1			–
10	1DA	*5 416 809*	2	CC - NFP		–
11	6VD	75 516 100	2			**ENTRETOISE** ABSTANDSSTUECK SPACER SEPARADOR DISTANZIALE
12	6RB	5 411 571	1		►6/83	**PATTE** LASCHE LUG PATA STAFFA
13	6VD	26 213 699	3			**VIS** SCHRAUBE SCREW TORNILLO VITE
14	9MA	79 03 201 014	2			–
15	6VD	5 508 480	1	«NYLON»		**RONDELLE** SCHEIBE WASHER ARANDELA RONDELLA
16	1DA	*5 416 807*	2	NFP		–
17	9DA	22 770 069	2			–
18	9AM	79 03 053 033	1			–
19	6VD	26 190 369	4			–
20	9AA	79 03 058 027	1	CO φ 5	►6/83	–
21	6VD	79 03 080 028	2	φ 5		–
22	1GX	26 240 309	1	φ 10,5	6/83 ►	–
23	9TT	79 03 034 070	1			**ECROU** MUTTER NUT TUERCA DADO
24	9TT	79 03 032 006	1		►6/83	–

137

6-721-10

K-05 ↓

PLATE-FORME
RAHMEN
PLATFORM
PLATAFORMA
PIATTAFORMA

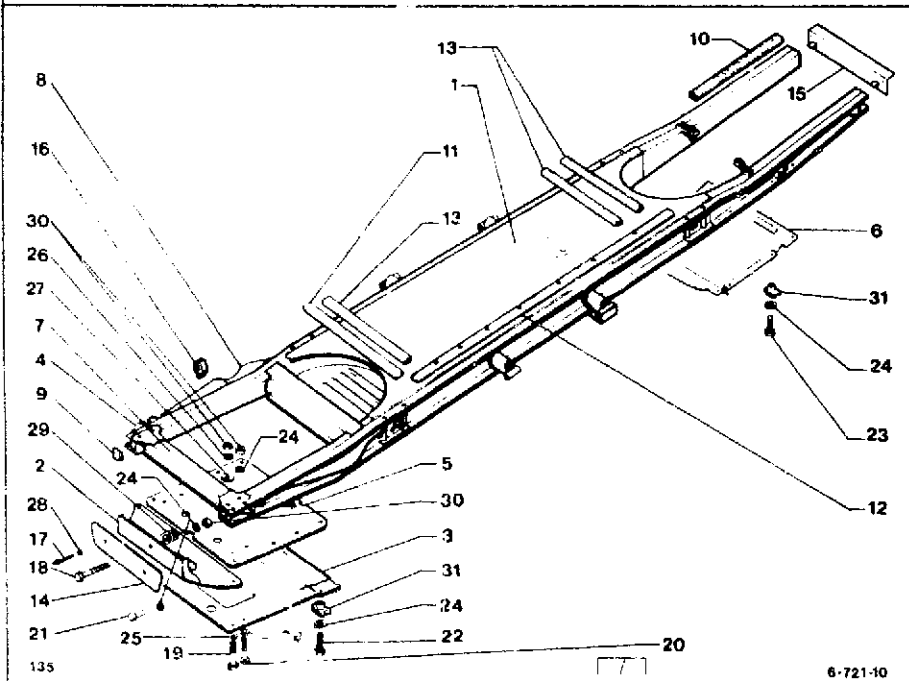

I	NUMEROS	K	4 x 2	DESIGNATIONS

NOTA : POUR REMPLACER LES PLATE-FORMES ▶5/71, VOIR N.I. No 62 A du 26.06.74
ANM. : ZUR ERSETZUNG DER RAHMEN ▶ 5/71, SIEHE N.I. Nr 62 A VOM 26.06.74
NOTE : FOR REPLACEMENT OF PLATFORME ▶ 5/71, SEE N.I. 62 A OF 26.06.74
NOTA : PARA REEMPLAZAMIENTO DE PLATAFORMAS ▶ 5/71, VER N.I. 62. A DEL 26.06.74
NOTA : PER SOSTITURE LE PIATTAFORME ▶ 5/71, VEDERE N.I. 62 A DEL 26.06.74

								PLATE-FORME RAHMEN PLATFORM PLATAFORMA PIATTAFORMA
1	6AY	75 519 116	1			7/73 ▶7/75		**– ORDINAIRE**
			1	DEO 2 - AZU 434 288 A				– GEMEIN – COMMON – CORRIENTE – ORDINARIA
	6CA	*5 412 439*	1	NFP		▶7/75		**– «MER»** – KORROSIONSGESTAENIG – RUST-PROOF – ANTI-CORROSION – ANTICORROSIONE
	6CA	5 506 475	1			7/75 ▶7/77		**– ANTI-CORROSION - 4 AMORTIS.** – KOR.-BEFT., 4 STOSSDAEMPF. – RUST-PROOF, 4 SHOCK-ABS. – ANTI-CORROSION, 4 AMORTI. – ANTI-CORROS. 4 AMMO. IDRAUL.
	6CA	5 506 475	1			7/75 ▶7/77		**– «PISTE»** – F. GELAENDEFAHRZEUG – F. CROSS COUNTRY CARR – «PISTA» – «PISTA»
	5CA	5 506 475	1			7/77 ▶6/82		**– POUR FREIN A DISQUES** – F. EINBAU SCHEIBENBREMSEN – F. EQUIP. WITH DISC. BRAKES – PARA FRENOS DE DISCOS – PER FRENI A DISCHI
	6CA	*95 571 181* RP 5 506 475	1			6/82 ▶		–
2	6AY	YA 721 50 NFP	1			▶11/70		**TOLE DE SKI** VORD. BLECH FRONT SHIELD CHAPA DELANTERA LAMIERA ANT.
	6AY	AY 721 288 A	1	AV		11/70 ▶ 7/77		**TOLE DE SKI «PISTE»** ABSCHIRMBLECH (G-FAHRZEUG) SHIELD F. CROSS-COUNTR. CAR CHAPA «PISTA» LAMIERA «PISTA»
	6CA	5 507 167	1			7/77 ▶		–
3	6AY	AY 721 289 A	1	AR		11/70 ▶		–
4		AZ 721 58 A	1	AV D				**SUPPORT** TRAEGER BRACKET SOPORTE SUPPORTO
		AZ 721 58	1	AV G				–
5	6AA	5 411 263	1	AV				**TOLE DE PROTECTION** ABSCHIRMBLECH- UNTEN LOWER SHIELD CHAPA DE PROTECCION BAJA LAMIERA PROTEZIONE INF.
6		AY 721 122	1	AR				–
7	6AY	5 411 280	1	AV				**TRAVERSE** TRAVERSE CROSSMEMBER TRAVIESA TRAVERSA

DEO ▶7/69
2 - AM 436 252 A
2 - AM 436 254 A
2 - AM 436 256 A
2 - ZC 9 615 926 U

137

6-721-10

K-04

PLATE-FORME (Suite)
RAHMEN (Forts.)
PLATFORM (Cont.)
PLATAFORMA (Cont.)
PIATTAFORMA (Cont.)

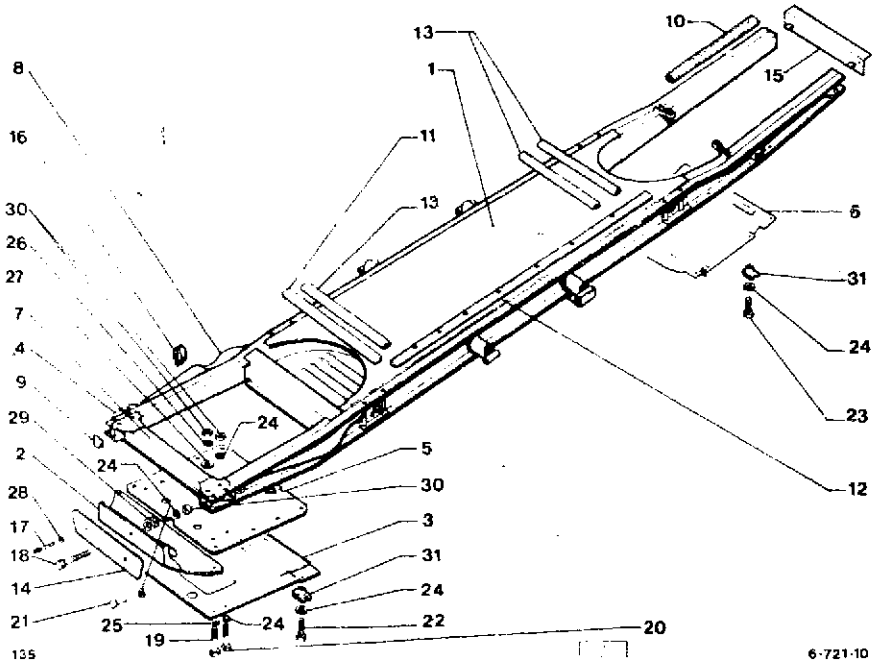

I	NUMEROS		K	4 x 2	DESIGNATIONS
8	6AY	*AY 721 104*	1	AV G - NFP ▶ 5/71	**TOLE LATÉRALE** SEITENBLECH SIDE PANEL CHAPA LATERAL LAMIERA LATERALE
	6AY	*AY 721 104 A*	1	AV D - NFP ▶ 5/71	–
	6AY	*AY 721 106*	1	AV G - NFP 5/71 ▶	–
	6AY	AY 721 106 A	1	AV D - NFP 5/71 ▶	–
9	6AY	*AY 721 126*	2	NFP	**PLAQUE DE FERMETURE** ABSCHLUSSBLECH CLOSING PANEL CHAPA DE CIERRE LAMIERA DI CHIUSURA
10	6AA	A 982 94	2		**FEUTRE DE CALAGE** FILZUNTERLAGE FELT PACKING STRIP BANDA DE FIELTRO NASTRO DI FELTRO
11	6AA	*A 982 92* RP 95 607 328	1		**CAOUTCHOUC DE CALAGE** GUMMUNTERLAGE RUBBER PACKING STRIP BANDA DE CAUCHO NASTRO DI GOMMA
12	6AA	95 607 329	2	RM *A 982 95* DEO 95 607 330	–
13	6AA	A 982 99 - NFP	3		–
14	6AY	AY 578 201 A NFP	1	«201» ▶ 7/77	**PLAQUE DE POLICE** NUMMERSCHILD NUMBER PLATE PLACA MATRICULA TARGA IMMATRICULAZIONE
15	6CA	*5 401 797*	1	AR - NFP - (CH) 12/70 ▶ 9/73	**SUPPORT PLAQUE DE POLICE** TRAGBLECH F. NUMMERSCHILD NUMBER PLATE BRACKET SOPORTE DE PLACA MATR. PORTATARGA
	6AY	*5 448 232*	1	AR (CH) - NFP 9/73 ▶	–
	6AY	5 507 660	1	AV 7/77 ▶	–
16	6AA	96 995 651	4		**PINCE PASSAGE DE ROUE** GUMMIKLAMMER F. RADKASTEN WHEEL-ARCH RUBB. CATCH PINZA DE PASO RUEDA PINZA PER PASSARUOTA
17	7CA	26 157 969 NFP	2		**RIVET** NIET RIVET REMACHE RIVETTO
18	9AS	23 707 019	3	TH 7 x 28 ▶ 5/74	**VIS** SCHRAUBE SCREW TORNILLO VITE
	9BF	*23 723 019* RP 79 03 101 782	1	TH 7 x 42 5/74 ▶	–
19	9BF	23 746 509	2	TH 7 x 35 5/74 ▶	–
20	9BF	23 728 019 - NFP	4	TH 7 x 65 ▶ 5/74	–
21	9BF	23 755 009	2	TH 7 x 70 5/74 ▶	–
22	9CA	79 03 101 771	6	TH 7 x 20	–
23	9GX	23 464 319	8	TH 7 x 22	–
24	9DA	79 03 058 011	13 8	AV AR CO 7,2 x 14,2 x 1,5	**RONDELLE** SCHEIBE WASHER ARANDELA RONDELLA
25	6GX	26 192 649	2	7,5 x 25 x 3	–
26	1MA	79 03 056 012	2	CR φ 7,3 x 12	–
27	9AA	79 03 058 029	2	CO φ 7,2 x 18,2	–
28	9AA	22 763 019	2	φ 4,2 x 10	–
29	1DA	5 420 479 NFP	3	CC φ 6 x 14 x 2,5	–

137

6-721-10

K-03

PLATE-FORME (Suite)
RAHMEN (Forts.)
PLATFORM (Cont.)
PLATAFORMA (Cont.)
PIATTAFORMA (Cont.)

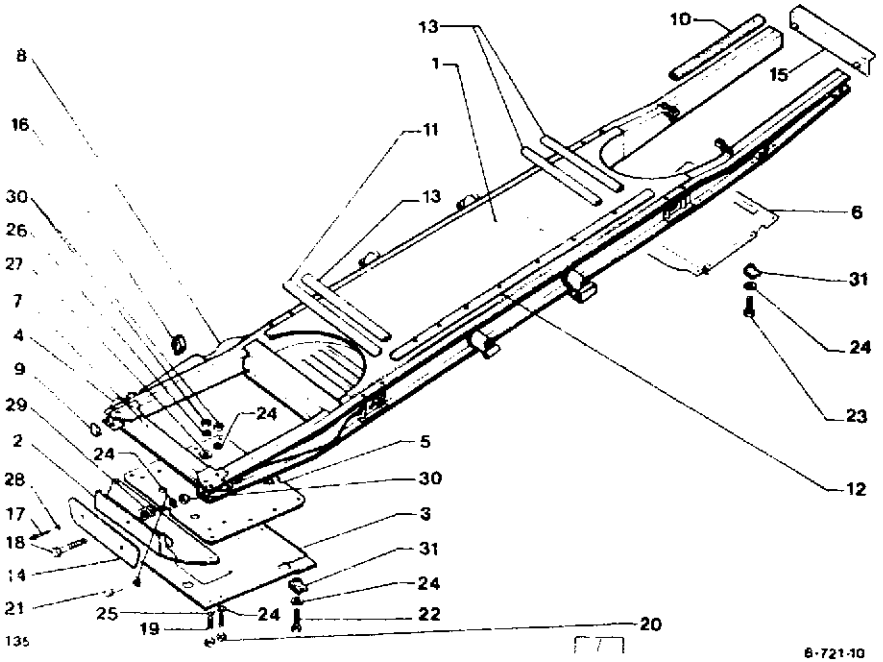

I	NUMEROS		K	4 x 2	DESIGNATIONS
30	9TT	79 03 032 036	7	HE 7 x 1,00	**ÉCROU** MUTTER NUT TUERCA DADO
31	7TT	26 158 209	6 8	AV - CLIP AR	–

1	6CA	5 506 476	1	– ARMÉE TAHITI –	**PIECES SPECIALES** SPEZIALTEILE SPECIAL PARTS PIEZAS ESPECIALES PEZZI SPECIALI **PLATE-FORME** RAHMEN PLATFORM PLATAFORMA PIATTAFORMA

137

6-721-20

K-02 ↓

PLATE-FORME
RAHMEN
PLATFORM
PLATAFORMA
PIATTAFORMA

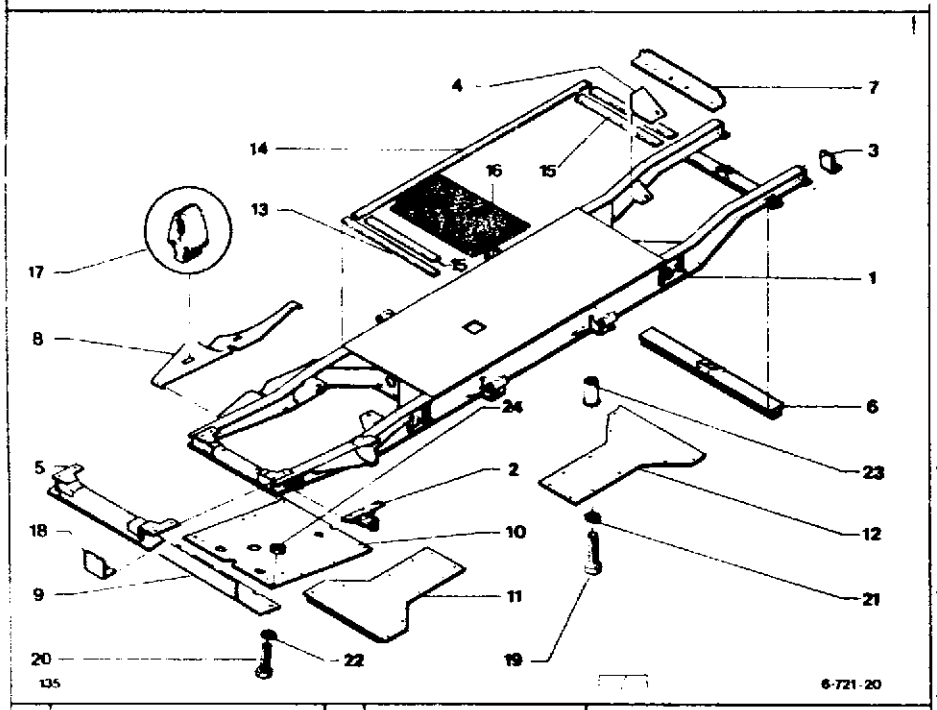

!	NUMEROS		K	4 x 4		DESIGNATIONS
1	6FF	75 530 295	1		▶6/81	**PLATE-FORME** RAHMEN PLATFORM PLATAFORMA PIATTAFORMA
	6AA	95 567 878	1		6/81 ▶	–
2	6AA	AZ 721 58	1	AV G		**SUPPORT AVEC BOUCLE** ABSCHLEPPVORRICHTUNG TOWING BRACKET SOPORTE CON ANILLO SUPPORTO CON ANELLO
	6AA	AZ 721 58 A	1	AV D		–

3	6FF	75 530 296	2	AR		**SUPPORT** HALTER BRACKET SOPORTE SUPPORTO
4	6FF	75 530 312	1	AR D		**ÉQUERRE** WINKELBLECH SQUARE ESCUADRA SQUADRETTA
	6FF	75 530 313	1	AR G		–
5	6AA	5 411 280	1	AV		**TRAVERSE** TRAVERSE CROSSMEMBER TRAVIESA TRAVERSA
6	6FF	75 530 351	1	AR		–
7	6AY	95 550 782	1			–
8	6AA	96 995 259	1	G		**TOLE D'ÉTANCHÉITÉ** ABDICHTBLECH SEALING PLATE CHAPA DE ESTANQUEIDAD LAMIERA DI TENUTA
	6AY	AY 721 104 B	1	D - NFP		–
9	6FF	95 538 955	1	AV		**TOLE DE SKI** VORDERBLECH FRONT PANEL CHAPA DELANT. LAMIERA ANT.
10	6CA	95 552 831	1	AV	11/80 ▶	**TOLE SOUS MOTEUR** BLECH UNTER MOTOR PANEL UNDER ENGINE CHAPA BAJO MOTOR LAMIERA SOTTO MOTORE
11	6AY	95 550 777	1	AV		**TOLE DE FERMETURE** VERSCHLUSSBLECH CLOSING PANEL CHAPA DE CIERRE LAMIERA DI CHIUSURA
12	6AY	95 550 779	1	AR		–
13	6AA	95 607 328	1	CC - 586 x 25 x 10		**BANDE** STREIFEN STRIP CINTA NASTRO
14	6AA	95 607 329	2	CC - 10 x 25 x 1387		–
15	6AA	95 607 328	2	CC - 10 x 25 x 536		–
16	6CA	95 552 827	1	CC - 580 x 390		**TAPIS CALAGE** UNTERLEGMATTE PACKING CARPET ALFOMBRA SUPLEMENTO TAPPETTO SPESSORE
17	6AZ	AZ 951 397 A NFP				**PINCE DE PASSAGE DE ROUE** KLAMMER F. RADKASTEN WHEELARCH CLAMP PINZA DEL PASO RUEDA PINZA PASSARUOTA

137

6-721-20

K-01 →

PLATE-FORME (Suite)
RAHMEN (Forts.)
PLATFORM (Cont.)
PLATAFORMA (Cont.)
PIATTAFORMA (Cont.)

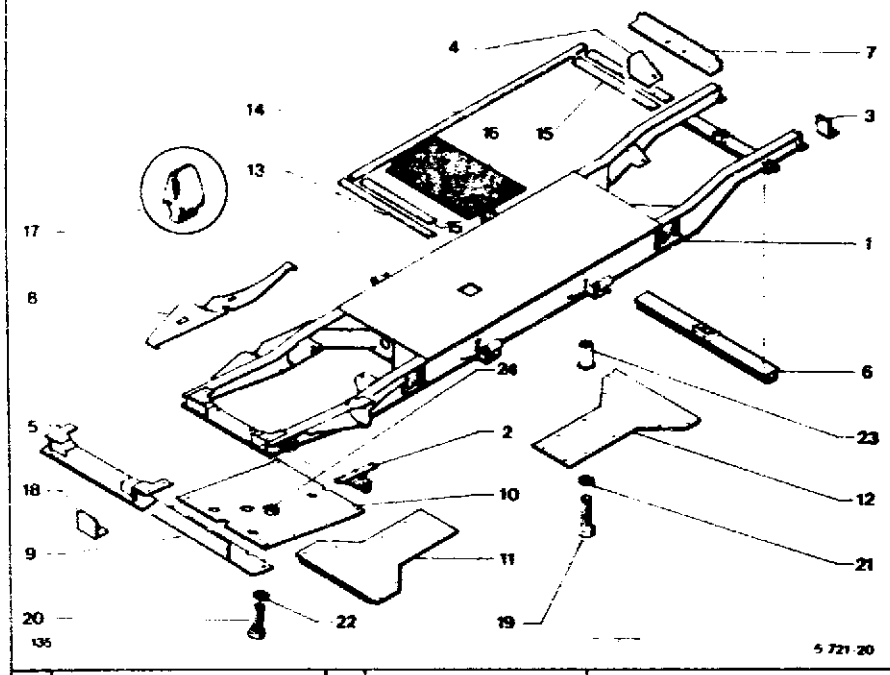

I	NUMEROS		K	4 x 4	DESIGNATIONS
18	6AA	A 721 126 NFP	2		**PLAQUE DE FERMETURE** VERSCHLUSSBLECH CLOSING PLATE CHAPA DE CIERRE LAMIERA DI CHIUSURA
19	9SM	79 03 201 013	10	TH 5 x 18	**VIS** SCHRAUBE SCREW TORNILLO VITE
20	9TT	79 03 101 770	6	TH 7 x 16	–
21	9AA	79 03 058 038 NFP	20	CO ⌀ 5	**RONDELLE** SCHEIBE WASHER ARANDELA RONDELLA
22	9AA	79 03 058 029	8	CR ⌀ 7 x 18	–
23	3GX	26 156 069	12	⌀ 5 x 0,80 - «RIVEKLE«	**ECROU** MUTTER NUT TUERCA DADO
24	4GZ 1VD	26 156 139 - NFP 79 03 032 036	8 6	⌀ 5 x 0,80 - «RIVEKLE« HE 7 x 1,00	–

L01

ICI FIN DU GROUPE
HIER IST DAS ENDE DER GRUPPE
HERE IS THE END OF GROUPE
AQUI ES EL FIN DEL GRUPO
QUI E LA FINE DEL GRUPPO

6

GROUPE
GRUPPE
GROUPE
GRUPO
GRUPPO

7

VOIR VUE
SIEHE BILD
SEE PICTURE
VER VISTA
VEDERE VEDUTA

M01

TABLEAU DES VUES 09/91 **GROUPE**
AUFSTELLUNG DER BILDER GROUP
TABLE OF PICTURE GROUP **7**
TABLA DE VISTAS GRUPO
TABELLA DELLE VEDUTE GRUPPO

SOUS-GROUPE UNTERGRUPPE SUBGROUP SUBGRUPO SOTTOGRUPPO	NUMÉRO NUMMER NUMBER NUMERO NUMERO	VUE BILD PICTURE VISTA VEDUTA
RMATURE DE CAISSE RMATUR E WAGENKASTEN ODY FRAME RMADURA DE CAJA RMATURA DELLA SCOCCA	7-008-10	M03 M04 M05
LEMENTS DE CAISSE VAGENKASTENTEILE ODY ELEMENTS LEMENTOS DE CAJA LEMENTI DELLA SCOCCA	7-812-10	M06 M07 M08 M09 M10
MONTANT DE PIED MILIEU MITTELPFOSTEN CENTRAL PILAR PIE CEN RAL MONTANTE CENTRALE	7-812-20	M11
PORTES AVANT ORDERE TUEREN RONT DOORS UERTAS DELANTERAS PORTIERE ANTERIORI		
– ▶ 4/71	7-841-10	M12
– 4/71 ▶	7-841-10A	M13 M14
CHAINES DE SECURITE SICHERHEISKETTEN SAFETY CHAINS CADENAS DE SECURIDAD CATENE DI SICUREZZA	7-841-20	N15
PANNEAU ARRIERE HECKKLAPPE TAILGATE COMPUERTA TRASERA SPONDA POSTERIORE	7-844-10	N14 N13 N12

CAPOT - CALANDRE - PLANCHE DE BORD HAUBE - VORD. VERKLEIDUNG BONNET - GRILLE - DASHBOARD CAPO - CALANDRA - PLANCHA ABORDO COFANO MOTORE - CALANDRA - CRUSCOTTO		
– ▶ 7/77	7-850-10	N11 N10 N09 N08
– 7/77 ▶	7-850-10A	N07 N06 N05
DECORS ADHESIFS KLEBEVERZIERUNGEN ADHESIVE EMBELLISHMENTS ADORNOS ADHESIVOS ABBELLIMENTI ADESIVI		
– «AZUR»	7-854-10	N04
SERRURES ET POIGNEES TUERSCHLOESSER UND GRIFFE LOCKS AND HANDLES CERRADURAS Y MANECILLAS SERRATURE E MANIGLIE		
– ▶ 4/71 ▶ 6/76	7-861-10	N03 N02
– 6/76 ▶	7-861-10A	N01 P01
PARE-BRISE - RETROVISEUR EXT. WINDSCHUTZSCHEIBE - RUECKBLICKSPIEGEL AUSSENS AUSSENSEITE WINDSCREEN - EXTERNAL REAR VIEW MIRROR PARABRISAS - RETROVISOR EXTERIOR PARABREZZA - RETROVISORE ESTERNO		
– ▶ 4/71	7-961-10	P02 P03
– 4/71 ▶	7-961-10A	P04 P05

137

7-008-10

M-03 ↑

ARMATURE DE CAISSE
ARMATUR. F. WAGENKASTEN
BODY FRAME
ARMADURA DE CAJA
ARMATURA DELLA SCOCCA

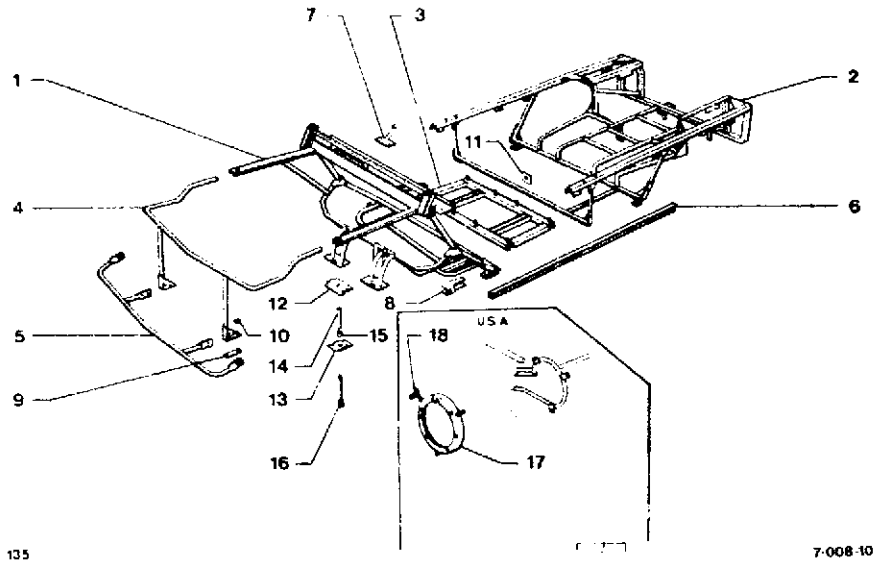

I	NUMEROS		K		DESIGNATIONS
		NOTA : ANTI-COR = (ANTI-CORROSION) (KORROSIONSFEST) (RUST-PROOF) (ANTI-CORROSION) (ANTICORROSIONE)			
1	7CA	5 507 185 RP 5 507 186	1	AV 7/77 ▶ RMP 5 460 341 DEO - AZ 424 96 5 507 626 2 - 75 521 930	**SUPPORT** ARMATUR FRAME SOPORTE SUPPORTO
	7CA	95 550 770	1	AV - 4 x 4 - NFP	–
	7CA	5 507 186	1	AV - ANTI-COR 7/77 ▶ RMP 5 460 342 DEO - AZ 424 96 5 507 626 2 - 75 521 930	–
	7CA	95 550 770	1	AV - ANTI-COR - 4 x 4 NFP ▶ 6/81	–
	7CA	95 568 845	1	AV - ANTI-COR - 4 x 4 NFP 6/81 ▶	–
2	7CA	75 516 198	1	AR - RMP 7/77 ▶	–
	7CA	95 591 028	1	AR - «AZUR»	–
	7CA	95 550 774	1	AR - 4 x 4 - NFP	–
	7CA	75 516 198	1	AR - ANTI-COR 7/77 ▶ RMP	–
	7CA	95 550 774	1	AR - 4 x 4 ▶ 6/81 NFP	–
	7CA	95 568 847	1	AR - 4 x 4 6/81 ▶ NFP	–
3	7CA	AY 008 104 A RP 5 405 054	1	AV	**SUPPORT DE SIEGE** TRAGRAHMEN F. SITZ SEAT SUPPORT FRAME SOPORTE DE ASIENTO SUPPORTO PER SEDILE
	7CA	95 568 843	1	4 x 4 - NFP	–
	7CA	5 405 054	1	ANTI-COR-RMP10/71 ▶	–
	7CA	95 568 843	1	ANTI-COR - 4 x 4 NFP 6/81 ▶	–
4	7AY	AY 008 105 A	1	NFP ▶ 9/70	**SUPPORT DE CALANDRE** TRAEGER F. VORD. VERKLEID. COOLER GRILLE BRACKET SOPORTE DE CALANDRA SUPPORTO PER CALANDRA
	7CA	75 516 836 RP 75 516 837	1	10/77 ▶	–
	7CA	95 538 494 RP 95 550 773	1	4 x 4	–
	7CA	75 516 837	1	ANTI-COR 10/77 ▶	–
	7CA	95 550 773	1	ANTI-COR - 4 x 4	–
5	7AY	AY 008 106 A	1	AV ▶ 9/70	**RENFORT DE PARE-CHOCS** VERSTAERKUNG F. STOSSSTANGE BUMPER REINFORCEMENT REFUERZO DE PARACHOQUES RINFORZO PER PARAURTI
	7AY	5 507 661	1	7/77 ▶	–
	7CA	95 539 646 RP 95 550 772	1	4 x 4	–
	7AY	AY 008 121 A RP 5 507 661		ANTI-COR 11/70 ▶ 7/77	–
	7CA	95 550 772	1	ANTI-COR - 4 x 4	–

137
7-008-10
M-04

ARMATURE DE CAISSE (Suite)
ARMATURE F. WAGENKASTEN (Forts.)
BODY FRAME (Cont.)
ARMADURA DE CAJA (Cont.)
ARMATURA DELLA SCOCCA (Cont.)

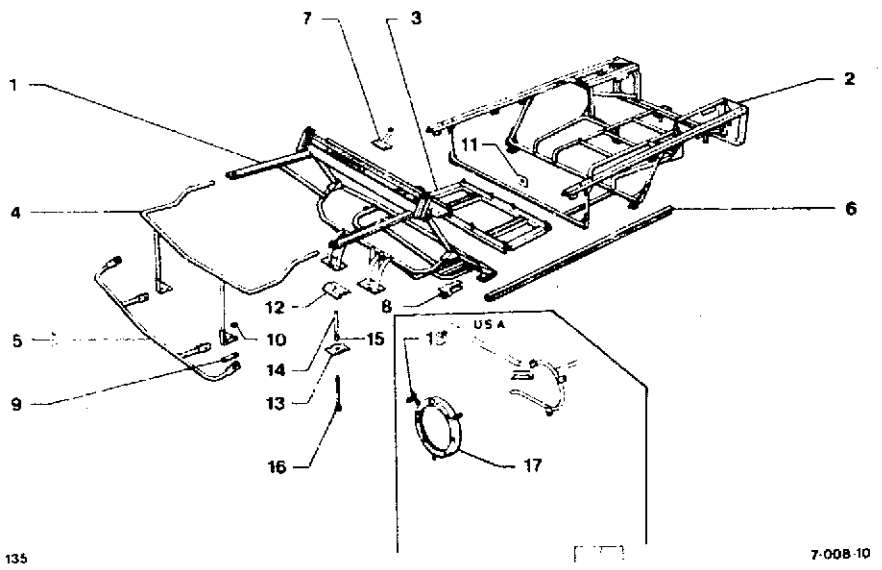

I	NUMEROS		K			DESIGNATIONS
6	7AY	*AY 008 199 A*	2	NFP	▶ 4/71	**BARRE DE LIAISON** VERBINDUNGSTANGE CONNECTING BAR BARA DE UNION BARRA DI COLLEGAMENTO
	7CA	5 402 962	2		4/71 ▶	–
	7AY	*AY 008 198 A*	2	ANT-COR-NFP	▶ 4/71	–
	7CA	5 402 962	2	ANT-COR	4/81 ▶	–
7	2CA	5 411 713	1	CENT	4/71 ▶	**SUPPORT** TRAEGER BRACKET SOPORTE SUPPORTO
8	7CA	5 431 098	2	INF	6/76 ▶	–
9	7AY	*AY 855 67*	2	ϕ 7 - NFP		**PLAQUETTE** PLAKETTE PLAQUETTE PLAQUETA PLACCHETTA
10	7AY	AY 855 70	4			–
11	7CA	5 411 711	2	AR	4/71 ▶	–
12	7CA	AY 008 149 A	2	SUP - AV	9/70 ▶7/77	**PLAQUE** BLECH PLATE PLACA PLACCA
			1	SUP - AV D	7/77 ▶	–
	7CA	5 507 626	1	SUP - AV G	7/77 ▶	–
13	7CA	AY 008 151 A	2	INF - AV	9/70 ▶	–
14	7CA	*AY 008 150 A*	2	ϕ 12 x 17 - LON 100	▶	**ENTRETOISE**
				NFP	9/70 ▶7/77	ABSTANDSSTUECK SPACER SEPARADOR DISTANZIALE
			1	D	7/77 ▶5/78	–
			2		5/78 ▶	–
15	7CA	75 521 930	1	G - 12x17x7	5/78 ▶	–
16	3AA	AZ 414 90	2	TH 10 x 1,50 - 125	9/70 ▶7/77	**VIS** SCHRAUBE SCREW TORNILLO VITE
			1	D - TH 10 x 1,50 - 125	7/77 ▶	–
	3AA	AZ 424 96	1	G - TH 10 x 1,50 - 135	7/77 ▶	–
					9/70 ▶	**PIECES SPÉCIALES 2 PLACES** SPEZIALTEILE F. ZWEISITZER SPECIAL PARTS F. 2-SEATER PIEZAS ESPECIALES 2 PLAZAS PEZZI SPECIALI 2 POSTI
	7CA	*5 402 971* RP 5 414 585	1	RMP	4/71 ▶	**ARMATURE COMPLÉMENTAIRE** ZUSATZARMATUR COMPLEMENTARY FRAME ARMADURA COMPLEMENTARIA ARMATURA COMPLEMENTARIA
	7CA	5 414 585	1		4/71 ▶	– **(ANTI-CORROSION)** – (KORROSIONSFEST) – (RUST-PROOF) – (ANTI-CORROSION) – (ANTICORROSIONE)
	7CA	*95 550 780*	1	4 x 4 - NFP		–
	9GX	23 720 019 NFP	2	TH 7 x 25		**VIS - PLATE-FORME** SCHRAUBE SCREW TORNILLO VITE
	9SM	79 03 101 178	10	TH 7 x 14		–
	9CA	*23 719 319* RP 79 03 101 771	?	TH 7 x 20		–
	9TT	23 464 319	4	TH 7 x 22		–

ARMATURE DE CAISSE (Suite)
ARMATURE F. WAGENKASTEN (Forts.)
BODY FRAME (Cont.)
ARMADURA DE CAJA (Cont.)
ARMATURA DELLA SCOCCA (Cont.)

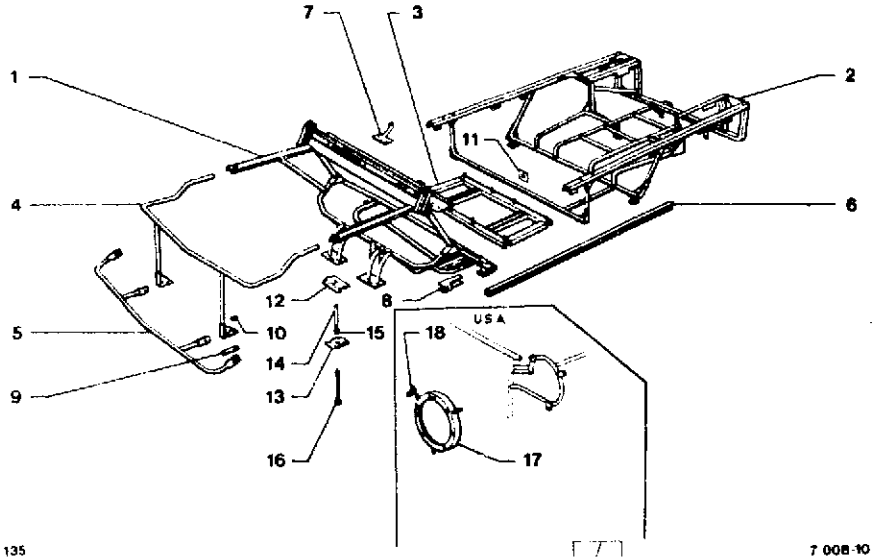

I	NUMEROS		K		DESIGNATIONS
				9/70 ▶	**PIECES SPÉCIALES 2 PLACES (Suite)** SPEZIALTEILE F. ZWEISITZER (Forts.) SPECIAL PARTS F. 2-SEATER (Cont.) PIEZAS ESPECIALES 2 PLAZAS (Cont.) PEZZI SPECIALI 2 POSTI (Cont.)
	9TT	*25 261 029* RP 79 03 032 036	2	HE 7 x 1,00	**ÉCROU** MUTTER NUT TUERCA DADO
	9TT	*79 03 032 011* RP 79 03 032 036	?	HE 7 x 1,00	–
	9TT	79 03 032 252 RP 79 03 232 018	2	HE 10 x 1,50	–

1	7CA	5 507 187	1	ARMÉE (24 V) AV 9/74 ▶ 7/77 RMP *5 460 343* DEO - AZ 424 96 5 507 626 2 - 75 521 930	**PIECES SPÉCIALES** **SUPPORT**
	7CA	5 507 187	1	AV 7/77▶	–
2	7CA	75 516 197	1	AR - RMP 7/77▶	–
3	8CA	5 405 054	1	AV XT	**SUPPORT DE SIEGE** **PIECES SPÉCIALES** SPEZIALTEILE SPECIAL PARTS PIEZAS ESPECIALES PEZZI SPECIALI
4	7AY	*AY 008 107 A*	1	(USA) - NFP ▶ 1/72	**SUPPORT DE CALANDRE** TRAEGER COOLER GRILLE BRACKET SOPORTE SUPPORTO
17	7AY	*AY 008 108 A*	2	(USA) - NFP ▶ 1/72	**SUPPORT DE PHARE** TRAEGER HEADLAMP SUPPORT SOPORTE SUPPORTO
18	7AY	*AY 008 115 A*	6	(USA) - NFP ▶ 1/72	**ÉQUERRE DE LIAISON** WINKELBLECH SQUARE LUG ESCUADRA SQUADRETTA
	7AY	*AY 851 304 A*	1	AR G - (CH) (DK) NFP ▶ 6/72	**BAVETTE** SCHMUTZFAENGER MUDFLAP FALDILLA PARASPRUZZI
	7AY	*AY 851 309 A*	1	AR D - (CH) (DK) NFP ▶ 6/72	–
	5AM	79 03 072 273	6	«POP» ▶ 6/72	**RIVET DE BAVETTE** NIET RIVET REMACHE RIVETTO

137

7-812-10

M-06

ÉLÉMENTS DE CAISSE
WAGENKASTENTEILE
BODY ELEMENT
ELEMENTOS DE CAJA
ELEMENTI DELLA SCOCCA

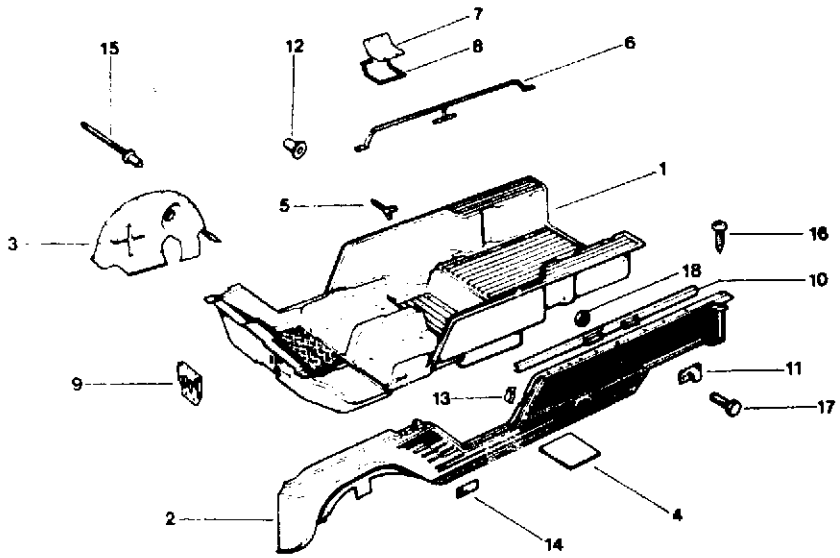

135 7-812-10

I	NUMEROS	K		DESIGNATIONS
				FOND DE CAISSE (4 PLACES) WAGENBODEN (F. VIERSITZER) FLOORING (F. FOUR-SEATER) FONDO DE CAJA (4 PLAZAS) FONDO SCOCCA (4 POSTI)
				– CHAUFFAGE PAR BUSES SANS DÉGAGEMENT DE PÉDALE D'ACCÉLÉRATEUR – MIT DUESENHEITZUNG-OHNE AUSSPARUNG F. GASPEDAL – HEATING THROUGH NOZZLES WITHOUT PUNCHING F. ACCEL. PEDAL – CALEFACCION FOR TOBERAS SIN REPUJADO PEDAL ACELERADOR – RISCALDAMENTO A DIFFUSORI SENZA INCAVO PER PED. ACCELERATORE
1	7CA 5 431 396	1	«201» - NFP ▶9/70	–
	7CA 5 431 397	1	«405» - NFP ▶9/70	–
	7CA 5 431 398	1	«808» - NFP ▶9/70	–
	7CA 5 431 399	1	«508» - NFP ▶9/70	–
	7CA 5 431 400	1	«201» 9/70 ▶ 4/71 NFP	**– AVEC DÉGAGEMENT PÉDALE D'ACCÉLERATEUR** – MIT AUSSPARUNG F. GASPEDAL – WIGH PUNCHING F. ACC. PEDAL – CON REPUJADO PEDAL ACEL. – CON INCAVO PER PEDAL ACC.
	7CA 5 431 401	1	1o «405» 9/70 ▶ 4/71 RM 2o-5 401 303 - NFP	–
	7CA 5 431 402	1	«808» 9/70 ▶ 4/71 NFP	–
	7CA 5 431 403	1	1o «508» 9/70 ▶ 4/71 NFP	–
	7CA 5 401 310	1	2o «508» 9/70 ▶ 4/71 NFP	–
	7CA 75 525 391 * 201	1	RMP - NFP ▶ 7/75 DEO 2 - 5 478 429 * 201	–
	7CA 75 525 391 * 400	1	RMP 7/77 ▶ 7/79 DEO 2 - 5 478 429 * 400	–
	7CA 75 525 391 * 508	1	RMP 7/77 ▶ 3156 DEO 2 - 5 478 429 * 508	–
	7CA 75 525 391 * 405	1	RMP 7/77 ▶ DEO 2 - 5 478 429 * 405	–
	7CA 75 525 391 * 808	1	NFP ▶ 7/77 DEO 2 - 5 478 429 * 808	–
	7CA 75 525 391 * 824	1	RMP 7/77 ▶	–
	7CA 75 525 391 * 524	1	7/79 ▶ 3156	–
	7CA 95 591 824 WB	1	«AZUR»	–
	7CA 95 575 087 PD	1	4 x 4 6/81 ▶	–
	7CA 95 575 087 EG	1	4 x 4 6/81▶ 3156	–
	7CA 95 575 087 AD NFP	1	4 x 4 6/81▶ 3156	–
	7CA 95 575 087 AC	1	4 x 4 6/81 ▶	–
				FOND DE CAISSE (2 PLACES) WAGENBODEN (F. ZWEISITZER) FLOORING (F. TWO-SEATER) FONDO DE CAJA (2 PLAZAS) FONDO SCOCCA (2 POSTI)
	7CA 5 489 871 * 201	1	NFP ▶ 7/75	**– AVEC DÉGAGEMENT PÉDALE D'ACCÉLÉRATEUR** – MIT AUSSPARUNG F. GASPEDAL – WITH PUNCHING F. ACC. PEDAL – CON REPUJADO PEDAL ACEL. – CON INCAVO PER PEDAL ACC.
	7CA 75 525 389 * 201	1	NFP ▶ 7/75	–
	7CA 75 525 389 * 400	1	RMP 7/77 ▶ 7/79 DEO - 5 478 829 * 400	–
	7CA 75 525 389 * 405		RMP 7/77 ▶ DEO 2 - 5 478 429 * 405	–
	7CA 75 525 389 * 508	1	RMP 7/77 ▶ 3156 DEO 2 - 5 478 429 * 508	–
	7CA 75 525 389 * 824	1	RMP 7/77 ▶	–
	7CA 75 525 389 * 524	1	7/79 ▶ 3156	–
	7CA 95 591 842 WB	1	«AZUR»	–
	7CA 95 575 088 PD	1	4 x 4 6/81 ▶	–
	7CA 95 575 088 EG	1	4 x 4 6/81 ▶3156	–
	7CA 95 575 088 AD NFP	1	4 x 4 6/81 ▶3156	–
	7CA 95 575 088 AC	1	4 x 4 6/81 ▶	–

ÉLÉMENTS DE CAISSE (Suite)
WAGENKASTENTEILE (Forts.)
BODY ELEMENT (Cont.)
ELEMENTOS DE CAJA (Cont.)
ELEMENTI DELLA SCOCCA (Cont.)

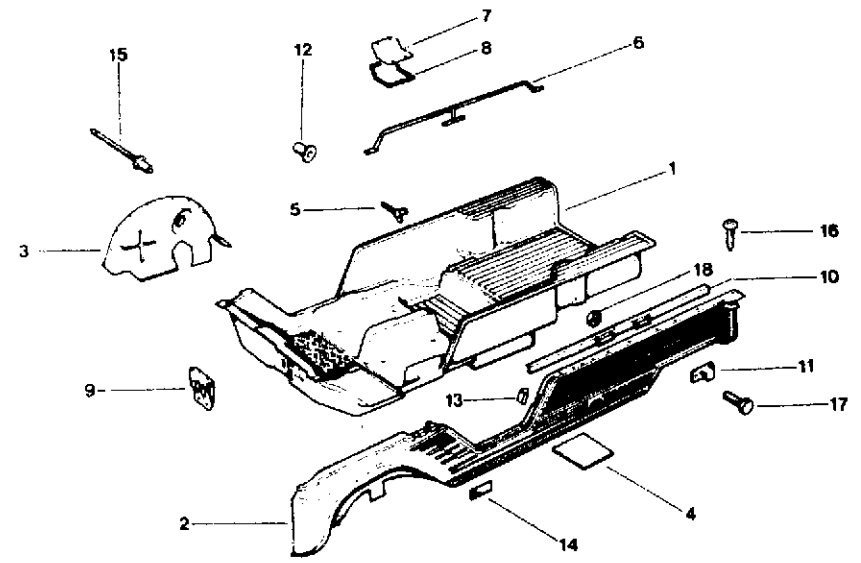

I	NUMEROS		K		DESIGNATIONS
2	7CA	5 476 362 * 201 NFP	1	G - RMP 4/71 ▶ 7/75	**PANNEAU DE COTÉ SANS ATTACHES CAPOTE NI PERÇAGE** SEITENVERSCHALUNG OHNE SPANNLASCHEN UND LOECHER SIDE PAN. WITHOUT FASTENERS F. CANVAS AND HOLES PANEL LATERAL SIN ENGANCHE DE CAPOTA NI AGUJEROS PANNELLO LATERALE SENZA AGGANCIO CAPOTE NE FORI
	7CA	5 476 362 * 400	1	G - NFP 7/75 ▶ 6/76	–
	7CA	5 476 362 * 405	1	G - RMP 4/71 ▶ 6/76	–
	7CA	5 476 362 * 808	1	G - RMP 4/71 ▶ 6/76	–
	7CA	5 476 362 * 508	1	G - RMP 4/71 ▶ 6/76	–
	7CA	5 478 170 * 400	1	G 6/76 ▶ 7/79	–
	7CA	5 478 170 * 405	1	G 6/76 ▶ 6/82	–
	7CA	5 478 170 * 508	1	G 6/76 ▶ 6/82	–
	7CA	5 478 170 * 808	1	G 6/76 ▶ 7/77	–
	7CA	5 478 170 * 824	1	G 7/77 ▶ 6/82	–
	7CA	5 478 170 * 524	1	G 7/79 ▶ 6/82	–
	7CA	95 570 949 PD	1	G 6/82 ▶	–
	7CA	95 570 949 EG	1	G 6/82 ▶3156	–
	7CA	95 570 949 AC	1	G 6/82 ▶	–
	7CA	95 570 949 AD	1	G 6/82 ▶ 3156	–
	7CA	95 591 826 WB	1	G - «AZUR»	–
	7CA	5 476 363 * 201	1	D RMP NFP 4/71 ▶ 7/75	–
	7CA	5 476 363 * 405	1	D - RMP 4/71 ▶ 6/76	–
	7CA	5 476 363 * 808	1	D - RMP 4/71 ▶ 6/76	–
	7CA	5 476 363 * 508	1	D - RMP 4/71 ▶ 6/76	–
	7CA	5 476 363 * 400	1	D 7/75 ▶ 6/76	–
	7CA	5 478 171 * 400	1	D 6/76 ▶ 7/79	–
	7CA	5 478 171 * 405	1	D 6/76 ▶ 6/82	–
	7CA	5 478 171 * 508	1	D 6/76 ▶ 6/82	–
	7CA	5 478 171 * 808	1	D 6/76 ▶ 7/77	–
	7CA	5 478 171 * 824	1	D 7/77 ▶ 6/82	–
	7CA	5 478 171 * 524	1	D 7/79 ▶ 6/82	–
	7CA	95 570 948 PD	1	D 6/82 ▶	–
	7CA	95 570 948 EG	1	D 6/82 ▶3156	–
	7CA	95 570 948 AC	1	D 6/82 ▶	–
	7CA	95 570 948 AD	1	D 6/82 ▶ 3156	–
	7CA	95 591 827 WB	1	D - «AZUR»	–
	7CA	95 538 502 * 405	1	G - 4 x 4 ▶ 6/81	–
	7CA	95 538 502 * 508	1	G - 4 x 4 ▶ 6/81	–
	7CA	95 538 502 * 524	1	G - 4 x 4 ▶ 6/81	–
	7CA	95 538 502 * 824	1	G - 4 x 4 ▶ 6/81	–
	7CA	95 568 851 PD	1	G - 4 x 4 6/81 ▶	–
	7CA	95 568 851 EG	1	G - 4 x 4 6/81 ▶ 3156	–
	7CA	95 568 851 AD	1	G - 4 x 4 6/81 ▶ 3156	–
	7CA	95 568 851 AC	1	G - 4 x 4 6/81 ▶	–
	7CA	95 538 501 * 405	1	D - 4 x 4 ▶ 6/81	–
	7CA	95 538 501 * 508	1	D - 4 x 4 ▶ 6/81	–
	7CA	95 538 501 * 524	1	D - 4 x 4 ▶ 6/81	–
	7CA	95 538 501 * 824	1	D - 4 x 4 ▶ 6/81	–
	7CA	95 568 850 PD	1	D - 4 x 4 6/81 ▶	–
	7CA	95 568 850 EG	1	D - 4 x 4 6/81 ▶ 3156	–
	7CA	95 568 850 AD	1	D - 4 x 4 6/81 ▶ 3156	–
	7CA	95 568 850 AC	1	D - 4 x 4 6/81 ▶	–
3	7CA	*AY 821 153 A*	1	G - NFP ▶ 9/74	**PASSAGE DE ROUE** RADKASTEN WHEEL-ARCH PASO RUEDA PASSARUOTA
	7CA	*AY 821 154 A* RP 95 571 820 * 602	1	G ▶9/74	–
	7CA	*AY 821 155 A*	1	G - NFP ▶9/74	–
	7CA	*AY 821 156 A*	1	G - NFP ▶9/74	–
	7CA	*5 482 214 * 201* RP 95 571 820 * 602	1	G - RMP 9/74 ▶7/75	–
	7CA	*5 482 214 * 808*	1	G-RMP-NFP 9/74▶ 7/77	–
	7CA	*5 482 214 * 400* RP 95 571 820 * 602	1	G - RMP 7/75 ▶7/79	–
	7CA	*5 482 214 * 824* RP 95 571 820 * 602	1	G 7/79 ▶	–
	7CA	*95 538 500 * 508*	1	G - 4 x 4 10/79 ▶	–
		RP 95 571 820*602	1	RMP - 4 x 2 9/74 ▶	–

ÉLÉMENTS DE CAISSE (Suite)
WAGENKASTENTEILE (Forts.)
BODY ELEMENT (Cont.)
ELEMENTOS DE CAJA (Cont.)
ELEMENTI DELLA SCOCCA (Cont.)

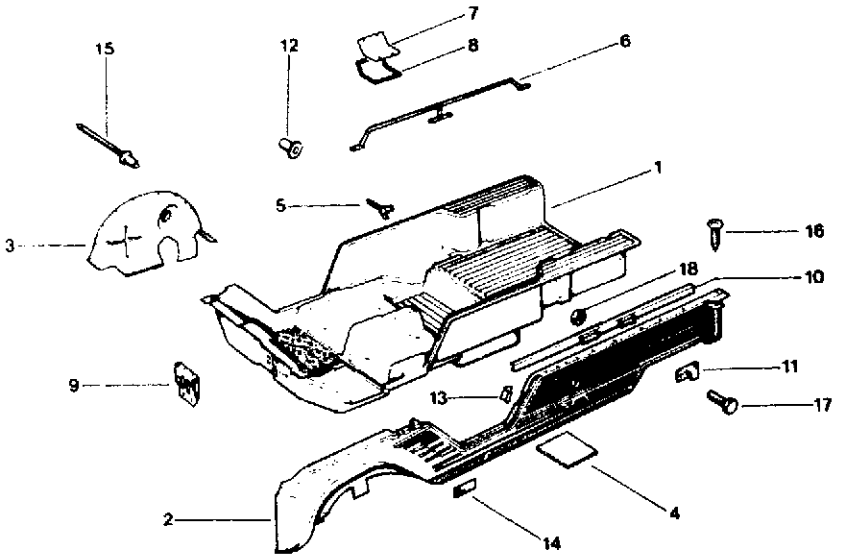

I	NUMEROS		K		DESIGNATIONS
3	7CA	*95 538 500 * 524*	1	G - 4 x 4 10/79 ▶	**PASSAGE DE ROUE (Suite)**
		RP 95 571 820 * 602	1	RMP - 4 x 2 9/74 ▶	RADKASTEN (Forts.)
					WHEEL-ARCH (Cont.)
					PASO RUEDA (Cont.)
					PASSARUOTA (Cont.)
	7CA	95 571 820 * 602	1	G - 4 x 4 10/79 ▶	–
			1	RM «405» «824»	
			1	RMP 4 x 2	
				«400» «405» «602»	
	7CA	*5 477 064 * 201*	1	D - RMP 4/71 ▶ 7/75	–
		RP 95 571 819 * 602			
	7CA	*5 477 064 * 400*	1	D 7/75 ▶ 7/79	–
		RP 95 571 819 * 602			
	7CA	*5 477 064 * 602*	1	D 6/81 ▶	–
		RP 95 571 819 * 602			
	7CA	95 571 819 * 602	1	D - 4 x 4	–
			1	RMP - 4 x 2 - «405»	
				«508» «808» «824»	
				«524»	
4	7CA	*AY 008 186 B*	?	300 x 200 x 3 ▶ 7/72	**JEU 4 PLAQUES RÉPARATION**
				NFP	SATZ VON 4 PLAKETTE
					SET OF 4 PLAQUETTES
					JUEGO DE 4 PLAQUETAS
					SERIE DI 4 PLACCHETTE
	7CA	*5 482 213 * 201*	?	300 x 200 x 3 - NFP	–
				7/72 ▶ 7/75	
	7CA	*5 482 213 * 400*	?	300 x 200 x 3 - NFP	–
				7/75 ▶ 7/79	
	7CA	5 482 213 * 405	?	300 x 200 x 3 7/72 ▶	–
				RMP	
	7CA	*5 482 213 * 808*	?	300 x200 x 3 - NFP	–
				7/72 ▶ 7/77	
				RMP	
	7CA	5 482 213 * 508	?	300x200x3 7/72 ▶ 3156	–
	7CA	5 482 213 * 824	?	300 x 200 x 3 7/77 ▶	–
				RMP	
	7CA	5 482 213 * 524	?	300x200x3 7/79 ▶ 3156	–
	7CA	5 482 213 * 811	?	300 x 200 x 3 - «AZUR»	–
5	7CA	95 569 011	1	G 6/81 ▶	**VIS DE ROUE DE SECOURS**
					SCHRAUBE F. ERSATZRAD
					SCREW F. SPARE WHEEL
					TORNILLO RUEDA REPUESTO
					VITE RUOTA SCORTA
6	7CA	95 538 529	2	4 x 4	**MAIN COURANTE**
					GELAENDER
					HAND-RAIL
					GUARDALADO
					RINGHIERA
7	7CA	*95 539 642 * 405*	1	4 x 4 - NFP	**TRAPPE DE VISITE**
					BESICHTIGUNGSKLAPPE
					INSPECTIONCOVER
					TAPA DE INSPECCION
					SPORTELLO ISPEZIONE
	7CA	*95 539 642 * 508*	1	4 x 4 - NFP ▶ 3156	–
	7CA	*95 539 642 * 524*	1	4 x 4 - NFP ▶ 3156	–
	7CA	*95 539 642 * 824*	1	4 x4 - NFP	–
8	7CA	95 545 159	1	4 x 4	**JOINT**
		NFP			DICHTUNG
					SEAL
					JUNTA
					GUARNIZIONE
9	7CA	*95 538 499*	1	4 x 4 - NFP	**RENFORT DE CAISSE**
					VERSTAERKUNG
					BODY REINFORCEMENT
					REFUERZO DE CAJA
					RINFORZO SCOCCA
10	7CA	95 567 886	1	G 12/80 ▶	**BARRE RENFORC. PANNEAU**
					VERSTAERKUNG F. VERSCHALUNG
					PANNER REINFORCEMENT BAR
					BARRA REFUERZO PANEL
					BARRA RINFORZO PANNELLO
	7CA	95 567 888	1	AV D 12/80 ▶	–
	7CA	*95 567 890*	1	AR D - NFP 12/80 ▶	–

ÉLÉMENTS DE CAISSE (Suite)
WAGENKASTENTEILE (Forts.)
BODY ELEMENT (Cont.)
ELEMENTOS DE CAJA (Cont.)
ELEMENTI DELLA SCOCCA (Cont.)

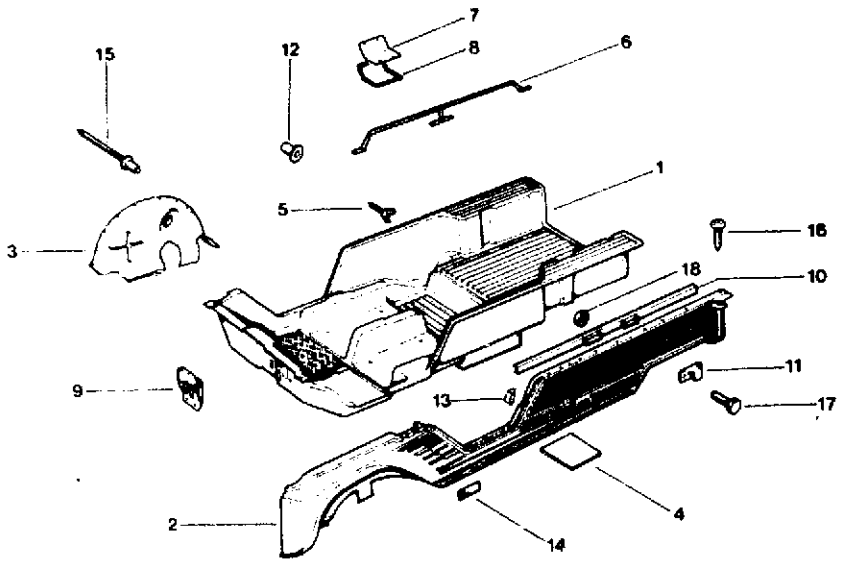

135 7-812-10

I	NUMEROS		K		DESIGNATIONS
11	7CA	P 972 88 NFP	?	▶ 4/71	**CROCHET CAPOTAGE** HAKEN F. VERDECK HOOK F. CANVAS GANCHO DE CAPOTA GANCIO PER CAPOTE
	7CA	*5 404 528* RP 95 404 528 AW	?	«PLASTIQUE» 4/71 ▶ 6/81	–
	7CA	*5 404 528 * 700* RP 95 404 528 XA	1	«PLASTIQUE» 6/81 ▶	–
12	8TT	ZC 9 613 018 U NFP	2	ϕ 11	**BOUCHON PLASTIQUE** PLASTIK-STOPFEN PLASTIC PLUG TAPON DE PLASTICA TAPPO DI PLASTICA
13	7CA	5 478 429 * 201	1	6/76 ▶	**OBTURATEUR DE PANNEAU** STOPFEN F. VERSCHALUNG PANEL PLUG OBTURADOR DE PANEL OTTURATORE PER PANNELLO
	7CA	5 478 429 * 405	1	6/76 ▶	–
	7CA	5 478 429 * 808	1	6/76 ▶	–
	7CA	5 478 429 * 508	1	6/76 ▶	–
	7CA	5 478 429 * 400	1	▶ 7/79	–
14	7CA	*95 590 313* RP 95 624 503	1	10/82 ▶	**DÉCALCOMANIE PV - PTC**
	7CA	*95 591 494* RP 95 624 503	1	4 x 4 11/82 ▶	–
15	7CA	ZC 9 618 792 U		«POP»	**RIVET** NIET RIVET REMACHE RIVETTO
	7CA	26 187 959	?	«POP»	–
	7CA	78 03 072 262	?	«POP»NOIR «MÉHARI AZUR»	
16	7CA	26 225 779	8	ϕ 7	**VIS** SCHRAUBE SCREW TORNILLO VITE
	9TT	*23 660 319* RP 79 03 201 130	4	TH 5 x 14	–
	9AY	*23 673 019* RP 79 03 201 018	2	TH 5 x 45	–
	9TT	23 669 319	2	TH 5 x 35	–
	9TT	*23 743 019* RP 79 03 101 806	2	TH 7 x 30	–
17	9TT	*ZC 9 231 900 U*	6	HE 5 x 0,75 - NFP	**ÉCROU** MUTTER NUT TUERCA DADO
	9TT	24 241 009 NFP	2	HE 7 x 1,00 ARMÉE (24)	–
	7CA	75 525 392 * 405	1	7/77 ▶	**PIECES SPÉCIALES** **FOND DE CAISSE (4 PLACES)** **FOND DE CAISSE (2 PLACES)**
	7CA	5 405 383	2	XT	**ANNEAU ÉLASTIQUE** **PIECES SPÉCIALES** SPEZIALTEILE SPECIAL PARTS PIEZAS ESPECIALES PEZZI SPECIALI
1	7CA	*5 411 882* RP 75 525 391 * 201 DEO 2 - 5 478 429 * 201	1	(CH) (B) «201» 4/71 ▶4/72	**FOND DE CAISSE (CEINTURES DE SÉCURITÉ A L'AVANT)** WAGENBODEN (EINBAU SICHERHEITSGURTE AN VORD. SITZEN) FLOORING (ARRANGEMENT FOR FRONT SEAT BELTS) FONDO DE CAJA (MONTAJE DE CINTUR. SOBRE ASIENTOS DEL.) FONDO SCOCCA (CINTURE DI SICUREZZA ANT.)

ÉLÉMENTS DE CAISSE (Suite)
WAGENKASTENTEILE (Forts.)
BODY ELEMENT (Cont.)
ELEMENTOS DE CAJA (Cont.)
ELEMENTI DELLA SCOCCA (Cont.)

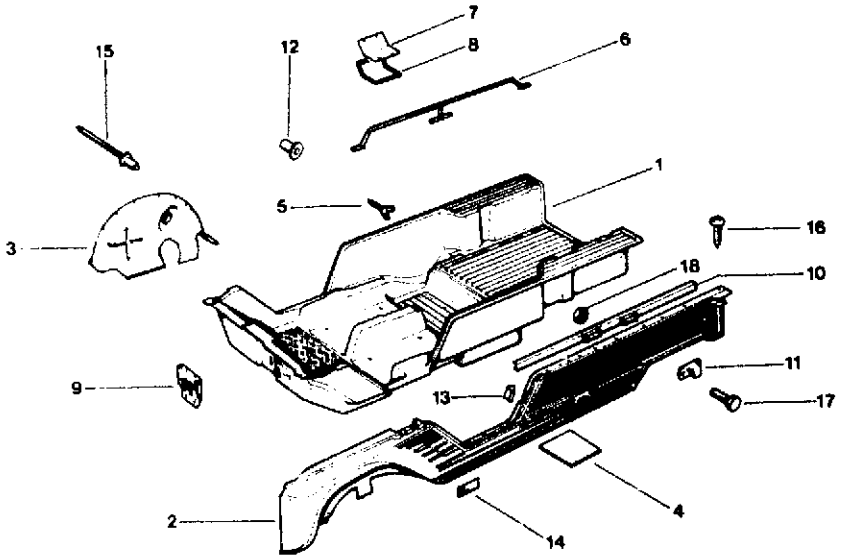

135 7-812-10

I	NUMEROS	K		DESIGNATIONS

				XT		**PIECES SPÉCIALES (Suite)** SPEZIALTEILE (Forts.) SPECIAL PARTS (Cont.) PIEZAS ESPECIALES (Cont.) PEZZI SPECIALI (Cont.) **FOND DE CAISSE (CEINTURES DE SÉCURITÉ A L'AVANT)** WAGENBODEN (EINBAU SICHERHEITSGURTE AN VORD. SITZEN) FLOORING (ARRANGEMENT FOR FRONT SEAT BELTS) FONDO DE CAJA (MONTAJE DE CINTUR. SOBRE ASIENTOS DEL.) FONDO SCOCCA (CINTURE DI SICUREZZA ANT.)
1	7CA	*5 411 883* RP 75 525 391 * 405 DEO 2 - 5 478 429 * 405	1	(CH) (B) «405» 4/71 ▶ 4/72	–
	7CA	5 411 884	1	(CH) (B) (S) «808» 4/71 ▶ 4/72	–
	7CA	*5 411 885* RP 75 525 391 * 508	1	(CH) (B) (S) «508» 4/71 ▶ 4/72	–
	7CA	5 411 887 NFP	1	«405» (USA) 4/71 ▶ 1/72	–
	7CA	*5 411 888* RP 5 489 870 * 808 DEO 2 - 5 478 429 * 808	1	«808» (USA) 4/71 ▶ 1/72	–
	7CA	*5 411 889* RP 75 525 391 * 508 DEO 2 - 5 478 429 * 508	1	«508» (USA) 4/71 ▶ 1/72	–
	7CA	*5 411 886* RP 5 489 870 * 201 DEO 2 - 5 478 429 * 201	1	«201» (USA) 4/71 ▶ 1/72	–
	1CA	*5 411 708*	2	21 x 42 x 5 - NFP (USA) (CH) (S) (B) 4/71 ▶	**RONDELLE D'ÉTANCHÉITÉ** DICHTSCHEIBE SEALING WASHER ARANDELA DE ESTANQUEIDAD RONDELLA DI TENUTA
	7CA	*5 411 712*	1	(USA) (CH) (S) (B) NFP 4/71 ▶	**JOINT D'ÉTANCHÉITÉ** DICHTUNG SEALING JUNTA GUARNIZIONE

137

7-812-20

M-11

MONTANT DE PIED MILIEU
MITTELPFOSTEN
CENTRE PILLAR
PIE CENTRAL
MONTANTE CENTRALE

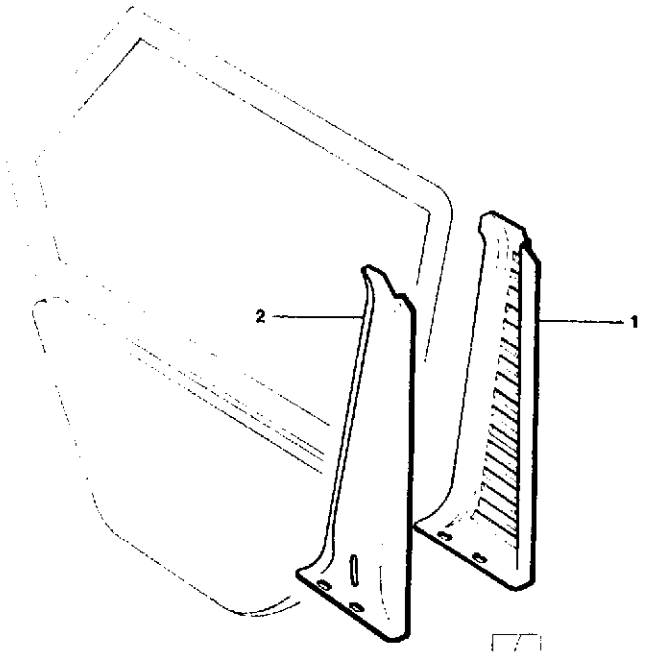

135

7-812-20

I	NUMEROS		K		DESIGNATIONS
1				– EXT G –	**MONTANT DE PIED MILIEU** MITTELPFOSTEN CENTRE PILLAR PIE CENTRAL MONTANTE CENTRALE
	7CA	5 476 389 * 201	1	RMP - NFP ▶ 7/75	–
	7CA	*5 476 389 * 400*	1	NFP ▶ 7/79	–
	7CA	5 476 389 * 405	1		–
	7CA	*5 476 389 * 808*	1	NFP ▶ 7/77	–
	7CA	5 476 389 * 508	1	▶ 3156	–
	7CA	5 476 389 * 824	1	7/77 ▶	–
	7CA	5 476 389 * 524	1	7/79 ▶ 3156	–
	7CA	5 476 389 * 356	1	«AZUR»	–
2				– INT G –	**MONTANT DE PIED MILIEU** MITTELPFOSTEN CENTRE PILLAR PIE CENTRAL MONTANTE CENTRALE
	7CA	5 476 387 * 201	1	RMP - NFP ▶ 7/75	–
	7CA	5 476 387 * 400	1	▶ 7/79	–
	7CA	5 476 387 * 405	1		–
	7CA	5 476 387 * 808	1	NFP ▶ 7/77	–
	7CA	5 476 387 * 508	1	NFP ▶ 3156	–
	7CA	5 476 387 * 824	1	7/77 ▶	–
	7CA	5 476 387 * 524	1	7/79 ▶ 3156	–
	7CA	95 591 834 LT	1	«AZUR»	–
	7CA	95 538 951 * 405	1	4 x 4 - NFP	–
	7CA	*95 538 951 * 508*	1	4 x 4 - NFP ▶ 3156	–
	7CA	95 538 951 * 524	1	4 x 4 ▶ 3156	–
	7CA	*95 538 951 * 824*	1	4 x 4 - NFP	–
				– INT D –	
	7CA	*5 476 388 * 201*	1	RMP - NFP ▶ 7/75	–
	7CA	*5 476 388 * 400*	1	NFP ▶ 7/79	–
	7CA	5 476 388 * 405	1		–
	7CA	*5 476 388 * 808*	1	NFP ▶ 7/77	–
	7CA	5 476 388 * 508	1	NFP ▶ 3156	–
	7CA	5 476 388 * 824	1	7/77 ▶ 3156	–
	7CA	5 476 388 * 524	1	NFP 7/79 ▶	–
	7CA	95 591 833 LT	1	«AZUR»	–
	7CA	95 538 950 * 405	1	4 x 4	–
	7CA	*95 538 950 * 508*	1	4 x 4 - NFP ▶ 3156	–
	7CA	95 538 950 * 524	1	4 x 4 ▶ 3156	–
	7CA	*95 538 950 * 824*	1	4 x 4 - NFP	–

137

7-841-10

M-12

PORTES AVANT
VORDERE TUEREN
FRONT DOORS
PUERTAS DELANTERAS
PORTIERE ANTERIORI

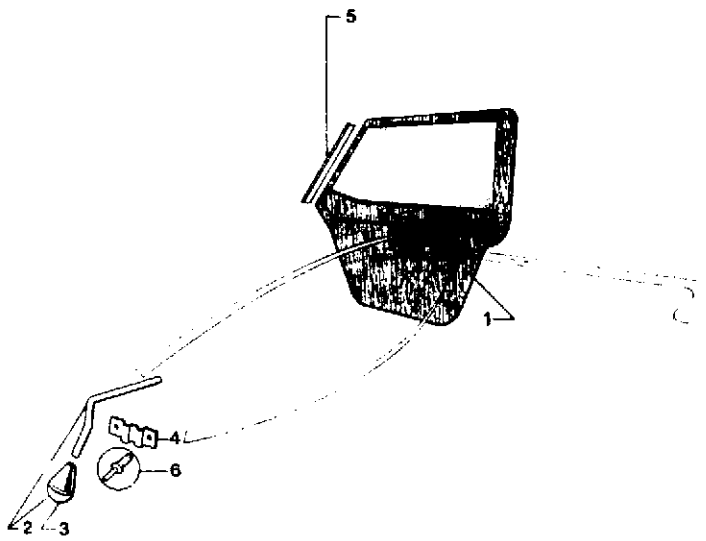

135

7-841-10

I	NUMEROS	K	▶ 4/71	DESIGNATIONS
				PORTE TUER DOOR PUERTA PORTIERA
1	*AY 841 201 A*	1	G ▶ 12/70 NFP	– **PLASTIQUE** – PLASTIK – PLASTIC – PLASTICO – PLASTICA

	7CA	*5 404 115*	1	G-NFP	12/70 ▶	– **PLASTIQUE LISSE** – PLASTIK, GLATT – SMOOTH PLASTIC – PLASTICO LISO – PLASTICA LISSA
	7CA	*5 404 116*	1	D - NFP	12/70 ▶	–
	7CA	*5 404 117*	1	G - NFP		– **COTON** – BAUMWOLLEN – COTTON – ALGODON – COTONE
	7CA	5 404 118 - NFP	1	D		–
	7CA	*AY 841 213 A*	1	G- NFP		– **PLASTIQUE RAYÉ** – PLASTIK, GERIEFELT – STREAKET PLASTIC – PLASTICO RAYADO – PLASTICA STRIATA
	7CA	*AY 841 214 A*	1	D-NFP		–
2	7AY	*AY 861 303 A*	2	NFP		**POIGNÉE AVEC BOULE** TUERGRIFF MIT KNOPF HANDLE WITH KNOB MANECILLA CON BOLA MANIGLIA CON POMELLO
3	7AY	*AY 861 304 A*	2	NFP		**BOULE DE POIGNÉE** KNOPF KNOB BOLA POMELLO
4	7AY	*AY 861 320 B*	2	NFP RMP	6/70 ▶	**LAME DÉVERROUILLAGE** VERSCHLUSSBLECH LOCKING PLATE CHAPA DE CIERRE LAMA DI CHIUSURA
5	6CA	5 404 112 **NFP**	2		12/70 ▶	**CHARNIERE DE PORTE** TUERSCHARNIER DOOR HINGE BISAGRA DE PUERTA CERNIERA PER PORTIERA
6	7CA	26 187 959	?			**RIVET** NIET RIVET REMACHE RIVETTO
				XT		**PIECES SPÉCIALES** SPEZIALTEILE SPECIAL PARTS PIEZAS ESPECIALES PEZZI SPECIALI
1	7CA	*5 404 119*	1	G - (USA) - NFP		**PORTE** TUER DOOR PUERTA PORTIERA
	7CA	*5 404 120*	1	D - (USA) - NFP	–	–

PORTES AVANT
VORDERE TUEREN
FRONT DOORS
PUERTAS DELANTERAS
PORTIERE ANTERIORI

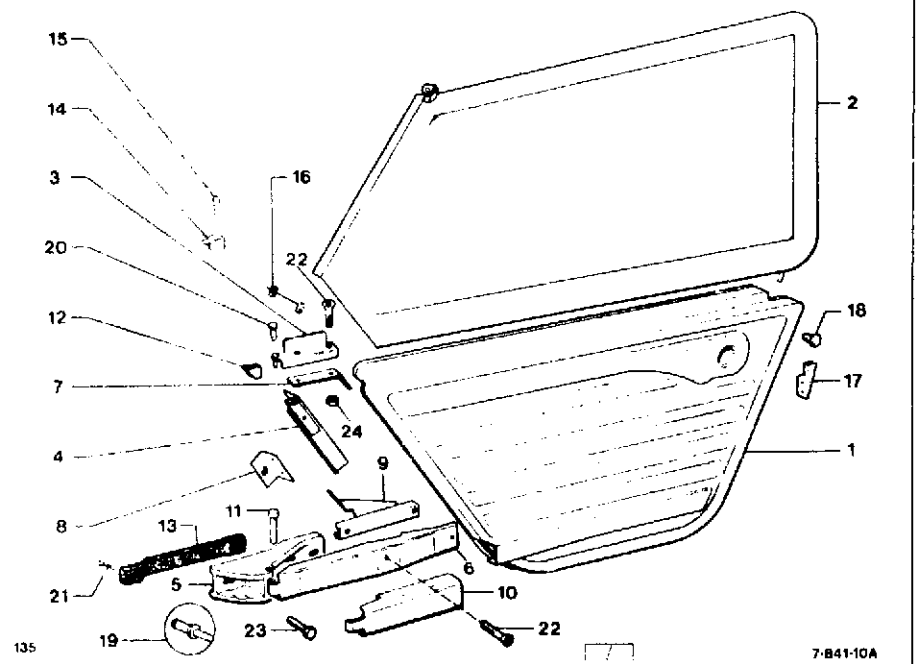

I	NUMEROS	K	4/71 ▶	DESIGNATIONS
1		1	INF	**PORTE** TUER COOR PUERTA PORTIERA
	7CA *5 478 427 * 201*	1	G - RMP 6/76 ▶ NFP	–
	7CA 5 478 427 * 400	1	G - RMP 6/76 ▶ 7/79	–
	7CA 5 478 427 * 405	1	G - RMP 6/76 ▶	–
	7CA 5 478 427 * 508	1	G - RMP 6/76 ▶ 3156	–
	7CA 5 478 427 * 808	1	G-RMP-NFP 6/76 ▶ 7/77	–
	7CA 5 478 427 * 824	1	G 7/77 ▶	–
	7CA 5 478 427 * 524	1	G 7/79 ▶ 3156	–
	7CA 95 596 715	1	G - «AZUR»	–

	7CA	*5 478 428 * 201*	1	D - RMP - NFP 6/76 ▶	–
	7CA	*5 478 428 * 400*	1	D - RMP 6/76 ▶ 7/79 NFP	–
	7CA	5 478 428 * 405	1	D - RMP 6/76 ▶	–
	7CA	5 478 428 * 508	1	D - RMP 6/76 ▶ 3156	–
	7CA	5 478 428 * 808	1	D - RMP 6/76 ▶ 7/77	–
	7CA	5 478 428 * 824	1	D 7/77 ▶	–
	7CA	5 478 428 * 524	1	D 7/79 ▶ 3156	–
	7CA	95 596 716	1	D - «AZUR»	–
2	7CA	5 419 487	1	SUP G	**PORTE (COTON)** TUER (BAUMWOLLEN) DOOR (COTTON) PUERTA (ALGODON) PORTIERE (COTONE)
	7CA	5 419 488	1	SUP D	–
	7CA	5 464 929	1	SUP G 4/74 ▶	**– (PLASTIQUE)** – (PLASTIK) – (PLASTIC) – (PLASTICO) – (PLASTICA)
	7CA	5 464 930	1	SUP D 4/74 ▶	–
	7CA	95 591 573 LT	1	SUP G - «AZUR»	–
	7CA	95 591 572 LT	1	SUP D - «AZUR»	–
3	7CA	5 403 585	2	SUP ▶ 6/76	**CHARNIERE** SCHARNIER HINGE BISAGRA CERNIERA
	7CA	5 481 085	1	SUP G 6/76 ▶	–
	7CA	5 481 086	1	SUP D 6/76 ▶	–
4	7CA	5 403 548	1	SUP G ▶ 6/76	–
	7CA	5 481 092	1	SUP G 6/76 ▶	–
	7CA	5 481 093	1	SUP D 6/76 ▶	–
	7CA	5 403 551	1	SUP D ▶ 6/76	–
5	7CA	5 481 091	2	INF 6/76 ▶	–
6	7CA	5 445 944	1	INF G 4/74 ▶ 6/76 RMP	–
	7CA	5 445 945	1	INF D 4/74 ▶ 6/76 RMP	–
	7CA	5 481 088	2	6/76 ▶	–
7	7CA	5 411 260	2	▶ 6/76	**RENFORT CHARNIERE** VERSTAERKUNG REINFORCEMENT REFUERZO DE BISAGRA RINFORZO CERNIERA
	7CA	5 481 090	2	SUP 6/76 ▶	–
8	7CA	*5 411 259*	2	NFP ▶ 6/76	–
	7CA	5 481 096	1	G 6/76 ▶	–
	7CA	5 481 097	1	D 6/76 ▶	–
9	7CA	5 481 081	1	INF G 6/76 ▶	–
	7CA	5 481 082	1	INF D 6/76 ▶	–
10	7CA	5 476 384 * 201 NFP	2	▶ 7/75	**ENJOLIVEUR** ZIERSTUECK EMBELLISHMENT EMBELLECEDOR MODANATURA
	7CA	5 476 384 * 400	2	7/75 ▶ 6/76	–
	7CA	5 476 384 * 405	2	NFP ▶ 6/76	–
	7CA	5 476 384 * 508	2	▶ 6/76	–
	7CA	*5 476 384 * 808*	2	NFP ▶ 6/76	–
	7CA	*5 476 384 * 824*	2	NFP	–

PORTES AVANT (Suite)
VORDERE TUEREN (Forts.)
FRONT DOORS (Cont.)
PUERTAS DELANTERAS (Cont.)
PORTIERE ANTERIORI (Cont.)

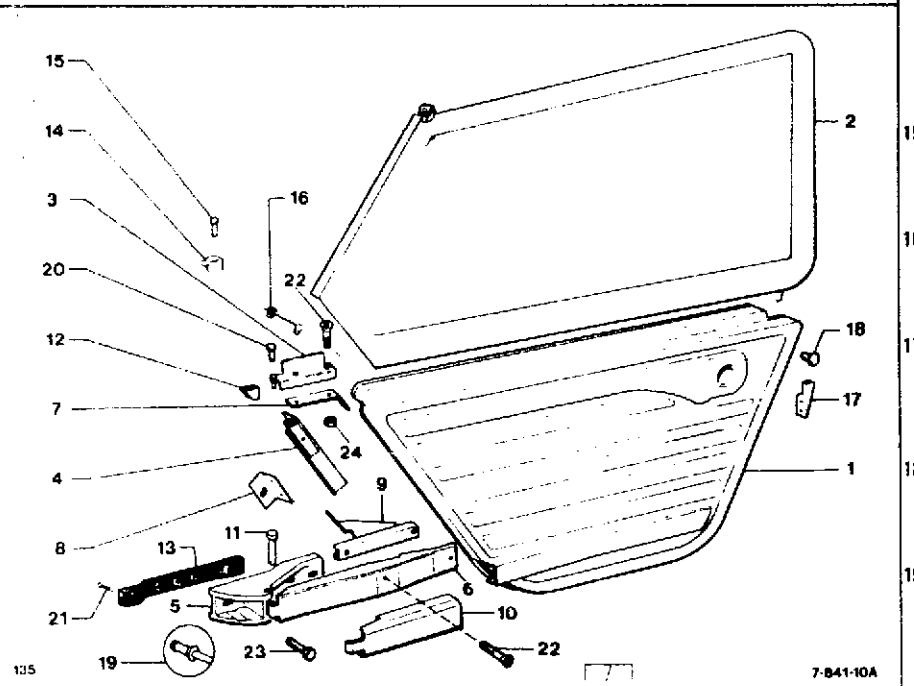

I	NUMEROS		K	4/71 ▶	DESIGNATIONS
11	7CA	ZC 9 612 018 W	2		**AXE** BOLZEN SPINDLE EJE PERNO
12	7CA	5 403 779	2		**ÉTANCHÉITÉ** ABDICHTSTUECK SEALING JUNTA GUARNIZIONE
13	7AY	AY 841 78 A	2	ENT 129	**TIRANT** ZUGBAND CHECK STRAP TIRANTE TIRANTE
	7CA	5 445 942	2	ENT 160	–
14	7AA	AZ 961 53	1	G ▶ 3/77	**GACHE** EINRASTUNGSHUELSE CATCH BUSH CASQUILLO DE ENGANCHE BOCCHETTA
	7AA	5 504 387	1	G 3/77 ▶	–
	7AA	AZ 961 53 A	1	D ▶ 3/77	–
	7AA	5 504 388	1	D 3/77 ▶	–
15	7AA	AZ 961 108	2		**BROCHE** ZAPFEN PIN CLAVIJA SPINA
16	7CA	5 419 486	2		**ÉQUERRE AVEC DOIGT** WINKELSTUECK MIT DAUMEN SQUARE WITH FINGER ESCUADRA CON DEDO SQUADRETTA CON NAZELLO
17	7CA	5 403 599	1	G	**GOUTTIERE D'ARRET** HALTERINNE STOP CHANNEL CANALEJA DE RETENCION CANALETTO D'ARRESTO
	7CA	5 403 600	1	D	–
18	7AY	*AY 851 163* RP 95 548 822	4	CC	**BUTÉE** ANSCHLAG STOP TUBO REGGISPINTA
19	7CA	ZC 9 618 792 U	?	«POP»	**RIVET** NIET RIVET REMACHE RIVETTO
	7CA	26 187 959	?	«POP»	–
	7AU	*26 187 479* RP 79 03 072 083	?	«POP»	–
20	7CA	26 172 199	2	φ 3 - LON 14 6/76 ▶	**GOUPILLE** PASSSTIFT PIN GRUPILLA COPIGLIA
21	7CA	26 225 779	4	TR 7 x 25	**VIS** SCHRAUBE SCREW TORNILLO VITE
22	7AY	*26 214 179* RP 79 03 004 029	4	TH 6 x 16 6/76 ▶	–
	9TT	23 686 009	2	TH 6 x 28 6/76 ▶	–
23	9AA	*23 742 509*	4	TH 7 x 28 - NFP	–
	9AM	79 03 016 414	2	TFB 4,85 x 19	–

PORTES AVANT (Suite)
VORDERE TUEREN (Forts.)
FRONT DOORS (Cont.)
PUERTAS DELANTERAS (Cont.)
PORTIERE ANTERIORI (Cont.)

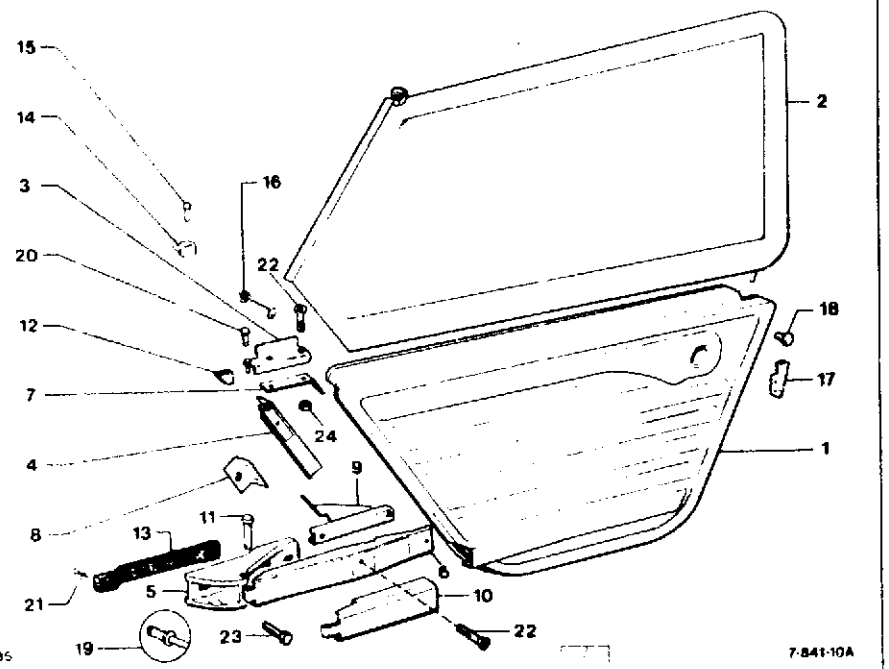

1	NUMEROS		K	4/71 ▶	DESIGNATIONS
24	7TT	26 158 299	4	CLIP - 7 x 1,00	**ÉCROU** MUTTER NUT TUERCA DADO
	9TT	79 03 032 036	2	RE 7 x 1,00	–

137

7-841-20

N-15

CHAINES DE SÉCURITÉ
SICHERHEITSKETTEN
SAFETY CHAINS
CADENAS DE SEGURIDAD
CATENE DI SICUREZZA

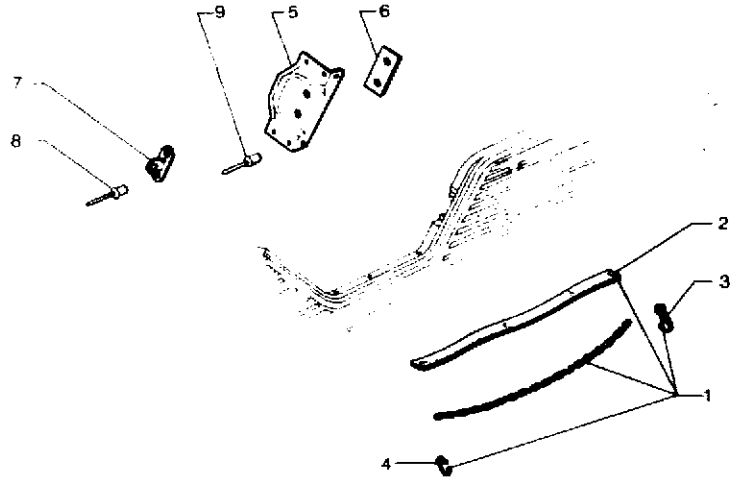

7-841-20

I	NUMEROS		K		DESIGNATIONS
1	7CA	*AY 841 259 A*	2	ENS - NFP	**CHAINE** KETTE CHAIN CADENA CATENA
2	7CA	*AY 841 261 A*	2	NFP	**GAINE** HUELLE SHEATH VAINA GUAINA
3	7CA	*AY 841 262 A*	2	NFP	**MOUSQUETON** KARABINERHAKEN SNAP-HOOK MOSQUETON MOSCHETTONE
4	7AY	AY 823 288 A	2		**ATTACHE** FANGSTUECK FASTENER SUJETADOR ATTACCO
5	7CA	5 503 754 * 400	2	7/76 ▶7/79	**SUPPORT PONTET NU** STEGTRAEGER, O. AUSRUEST. BRIDGE BRACKET, ONLY SOPORTE PONTECILLO DESN. SUPPORTO PONTICELLO NUDO
	7CA	5 503 754 * 405	2		–
	7CA	5 503 754 * 508	2	▶3156	–
	7CA	*5 503 754 * 808*	2	NFP ▶7/77	–
	7CA	5 503 754 * 824	2	7/77 ▶	–
	7CA	5 503 754 * 524	2	NFP 7/79 ▶3156	–
6		AY 823 268 A	4	▶7/76	**CONTRE-PLAQUE** GEGENBLECH COUNTER-PLATE CONTRA-PLACA CONTRAPLACCA
	7CA	*5 503 756*	4	NFP 7/76▶	–
7	7AY	AY 823 286 A	4		**PONTET** STEG BRIDGE PONTECILLA PONTICELLO
8	7CA	*79 03 072 263* RP 79 03 072 265	8	«POP» ϕ4,8	**RIVET** NIET RIVET REMACHE RIVETTO
9	7CA	26 187 959	8	«POP» ϕ 4,8	–

137

7-844-10

N-14

PANNEAU ARRIERE
HECKKLAPPE
TAILGATE
COMPUERTA TRASERA
SPONDA POSTERIORE

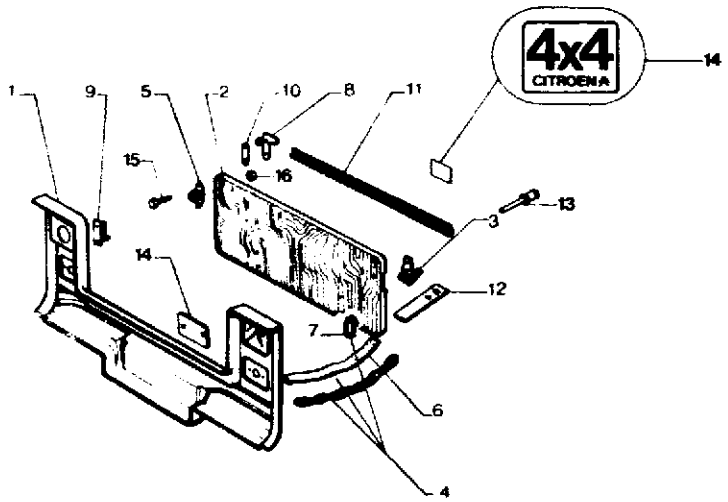

135

7-844-10

I	NUMEROS		K		DESIGNATIONS
1	7AY	AY 823 201 A NFP	1	«201» ▶ 6/69	**PANNEAU** HINTERE FUELLUNG REAR PANEL PANEL PANNELLO
	7AY	*AY 823 202 A*	1	«405» - NFP ▶ 6/69	–
	7AY	*AY 823 203 A*	1	«808» - NFP ▶ 6/69	–
	7CA	5 476 366 * 201	1	RMP-NFP 4/70 ▶ 7/75	–
	7CA	5 476 366 * 808	1	RMP 4/70 ▶ 7/77	–

1	7CA	5 507 662 * 400	1	RMP 7/77 ▶ 7/79	–
	7CA	5 507 662 * 405	1	RMP 7/77 ▶	–
	7CA	5 507 662 * 508	1	RMP 7/77 ▶ 3156	–
	7CA	5 507 662 * 824	1	7/77 ▶	–
	7CA	5 507 662 * 524	1	7/79 ▶ 3156	–
	7CA	5 507 662 * 811	1	«AZUR»	–
	7CA	*95 538 503 * 405*	1	4 x 4 - NFP	–
	7CA	95 538 503 * 508	1	4 x 4 - NFP ▶ 3156	–
	7CA	95 538 503 * 524	1	4 x 4 - NFP ▶ 3156	–
	7CA	*95 538 503 * 824*	1	4 x 4 - NFP	–
2	7AY	*AY 823 248 A*	1	«201» - NFP ▶ 6/69	**HAYON** HECKKLAPPE TAILGATE COMPUERTA SPONDA
	7AY	*AY 823 249 A*	1	«405» - NFP ▶ 6/69	–
	7AY	*AY 823 250 A*	1	«808» - NFP ▶ 6/69	–
	7CA	5 482 215 * 201	2	RMP-NFP 6/69 ▶ 7/75	–
	7CA	5 402 215 * 405	1	RMP 6/69 ▶	–
	7CA	5 482 215 * 808	1	RMP-NFP 6/69 ▶ 7/77	–
	7CA	5 482 215 * 508	1	RMP 6/69 ▶ 3156	–
	7CA	5 482 215 * 400	1	RMP 7/79 ▶ 7/75	–
	7CA	5 482 215 * 824	1	7/77 ▶	–
	7CA	5 482 215 * 524	1	7/79 ▶ 3156	–
	7CA	5 482 215 * 811	1	«AZUR»	–
3	7AY	AY 823 267 A	2		**CHARNIERE** SCHARNIER HINGE BISAGRA CERNIERA
4	7AY	AY 823 277 A	2		**CHAINE COMPLETE** KOMPLETTE KETTE COMPLETE CHAIN DADENA COMPLETA CATENA COMPLETA
5	7AY	AY 823 286 A	2		**PONTET** STEG HOOKING RING PUENTICELLA PONTICELLO
6	7AY	AY 823 287 A	2		**GAINE** KETTENHUELLE CHAIN SHEATH VAINA GUAINA
7	7AY	AY 823 288 A	2		**ATTACHE** ANHAENGERING FASTENER ENGANCHE ATTACO
8	7AY	AY 823 279 A	1	G	**GACHE** EINRASTUNGSWINKEL CATCH ESCUADRA DE ENGANCHE SQUADRETTA AGGANCIO
	7AY	AY 823 280 A	1	D	–
9	7AY	AY 823 281 A			**PATTE FERMETURE HAYON** VERSCHLUSSDAUMEN LOCKING FINGER PICAPORTA CHIAVISTELLO

PANNEAU ARRIERE (Suite)
HECKKLAPPE (Forts.)
TAILGATE (Cont.)
COMPUERTA TRASERA (Cont.)
SPONDA POSTERIORE (Cont)

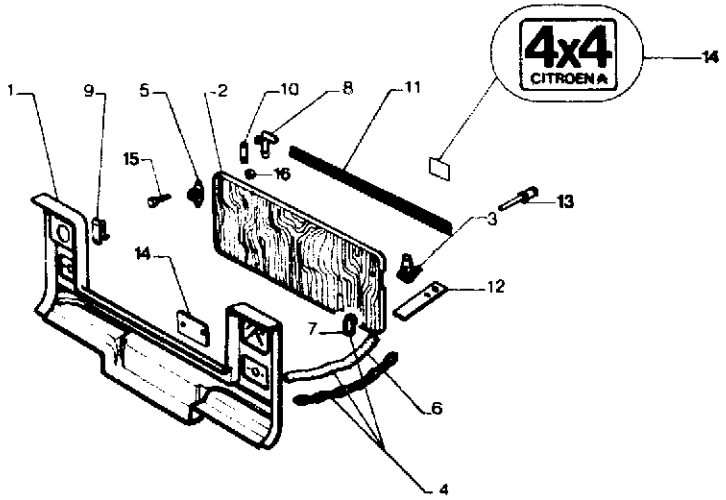

135 7-844-10

I	NUMEROS		K		DESIGNATIONS
10	7AY	AY 861 90	2		**PLAQUETTE** PLAKETTE PLAQUETTE PLAQUETA PLACCHETTA
11		AM 824 23 C **NFP**	1		**JONC** ZIERPROFIL BEADING PERFIL MODANATURA

12	7AY	AY 823 293 A	2	2 ϕ 6 x 1,00 9/70 ▶	**PLAQUETTE TARAUDÉE** GEWINDEPLAKETTE THREADED PLAQUETTE PLAQUETA ATERRAJADA PLACCHETTA FILETTATA
13	7CA	79 03 072 265	?	«POP»	**RIVET** NIET RIVET REMACHE RIVETTO
14	7CA	95 542 377	1	4 x 4 ▶ 7'82	**MONOGRAMME** MONOGRAMM MONOGRAM MONOGRAMA MONOGRAMMA
	7AA	95 579 369	1	«CITROËN» 7/82 ▶	–
	7CA	95 579 375	1	«MÉHARI» 7/82 ▶	–
	7CA	*95 579 376* RP 95 542 377	1	«MÉHARI 4x4» 7/82 ▶	–
	7CA	95 591 837	1	«AZUR»	–
15	9TT	23 663 319 **NFP**	4	TH 5 x 20	**VIS** SCHRAUBE SCREW TORNILLO VITE
	9TT	23 686 009	4	TH 6 x 28	–
	9TT	79 03 016 414	2	TR 4,85 x 19	–
		23 683 319 - NFP	4	TH 6 x 20 9/70 ▶	–
16	9TT	*ZD 9 231 900 U*	6	HE 5 x 0,75 - NFP	**ÉCROU** MUTTER NUT TUERCA DADO
	9TT	25 300 019 **NFP**	4	HEF 6 x 1,00 ARMÉE	–
					PIECES SPÉCIALES
	7CA	5 507 663 * 405	1	RMP 7/77 ▶	**PANNEAU AR**
	7CA	5 418 499	1		**CONDUIT D'ANTENNE**
	7AA	AY 831 102 A	1		**OEILLET D'ANTENNE**
				(CH)	**PIECES SPÉCIALES** SPEZIALTEILE SPECIAL PARTS PIEZAS ESPECIALES PEZZI SPECIALI
1	7CA	*5 401 791*	1	«201» 12/70 ▶ 7/75 NFP	**PANNEAU** FUELLUNG PANEL PANEL PANNELLO
	7CA	*5 507 664 * 405*	1	NFP 7/77 ▶	
	7CA	5 507 664 * 508	1	7/77 ▶ 3156	–
	7CA	5 401 793 - NFP	1	«808» 12/70 ▶ 7/77	–
	7CA	5 401 794 - NFP	1	«508» 12/70 ▶ 7/77	–
	7CA	*5 507 664 * 400*	1	NFP 7/77 ▶ 7/79	–
	7CA	5 507 664 * 824	1	NFP 7/77 ▶	–
	7CA	5 507 664 * 524	1	7/79 ▶ 3156	–

PANNEAU ARRIERE (Suite)
HECKKLAPPE (Forts.)
TAILGATE (Cont.)
COMPUERTA TRASERA (Cont.)
SPONDA POSTERIORE (Cont.)

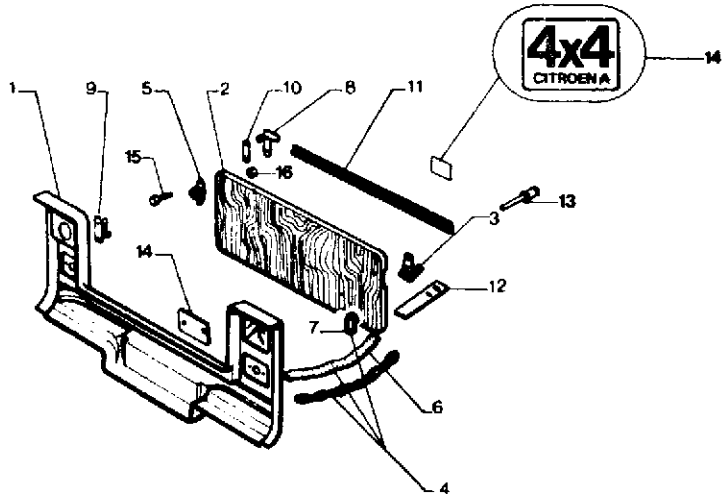

135 7-844-10

I	NUMEROS		K		DESIGNATIONS
				(CH)	**PIECES SPÉCIALES (Suite)** SPEZIALTEILE (Forts.) SPECIAL PARTS (Cont.) PIEZAS ESPECIALES (Cont.) PEZZI SPECIALI (Cont.)
	7AY	*AY 854 202 A*	1	NFP	**MONOGRAMME MÉHARI** MONOGRAMM MONOGRAM MONOGRAMA MONOGRAMMA

2	7CA	*5 482 216 * 201*	1	(I) RMP NFP	▶ 7/75	**HAYON** HECKKLAPPE TAILGATE COMPUERTA SPONDA
	7CA	5 482 216 * 405	1	NFP		–
	7CA	5 482 216 * 808	1	RMP - NFP	▶ 7/77	–
	7CA	5 482 216 * 508	1		▶ 3156	–
	7CA	5 482 216 * 400	1	RMP-NFP 7/75	▶ 7/79	–
	7CA	5 482 216 * 824	1		7/77 ▶	–
	7CA	5 482 216 * 524	1	NFP 7/79	▶ 3156	–
16	7CA	*5 476 374 * 201*	1	RMP - NFP	▶ 7/75	**PLAQUE OBTURATEUR ÉCLAIREUR** VERSCHLUSSPLATTE CLOSING PLATE PLACA OBTURACION PLACCA OTTURAZIONE
	7CA	*5 476 374 * 405*	1	NFP		–
	7CA	*5 476 374 * 808*	1	NFP	▶ 7/77	–
	7CA	*5 476 374 * 508*	1	NFP	▶ 3156	–
	7CA	*5 476 374 * 400*	1	NFP 7/75	▶ 7/79	–
	7CA	*5 476 374 * 824*	1	NFP	7/77 ▶	–
	7CA	*5 476 374 * 524*	1	NFP 7/79	▶ 3156	–

137 **CAPOT – CALANDRE – PLANCHE DE BORD**
MOTORHAUBE - VORD. VERKLEIDUNG - ARMATURENBRETT
7-850-10 BONNET – GRILLE – DASHBOARD
CAPO – CALANDRA – PLANCHA ABORDO
N-11 ↓ COFANO MOTORE – CALANDRA – CRUSCOTTO

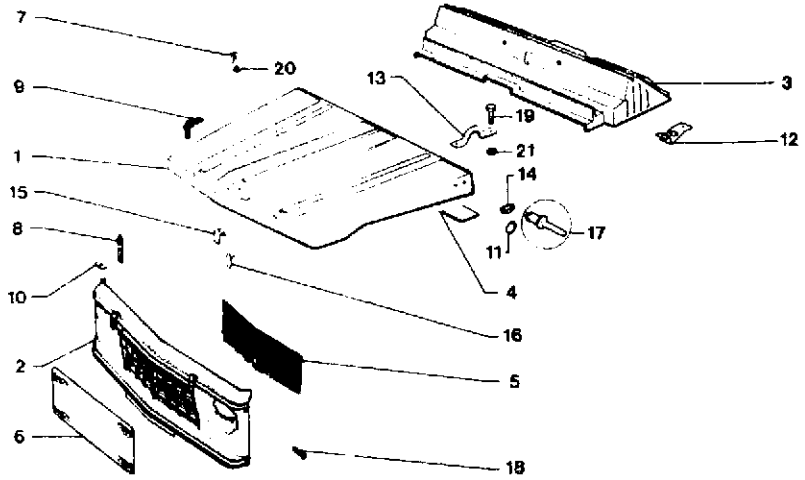

135 7-850-10

I		NUMEROS	K	▶ 7/77	DESIGNATIONS
1	7CA	*5 401 442*	1	«201» 9/70 ▶ 4/71 RMP - NFP	**CAPOT** MOTORHAUBE BONNET CAPO COFANO MOTORE
	7CA	*5 401 443*	1	«405» 9/70 ▶ 4/71 RMP - NFP	–
	7CA	*5 401 444*	1	«808» 9/70 ▶ 4/71 RMP - NFP	–
	7CA	*5 401 445*	1	«508» 9/70 ▶ 4/71 RMP - NFP	–
	7CA	*5 482 217 * 201*	1	RMP 4/71 ▶ 7/75 NFP	–
2	7CA	5 482 217 * 405	1	RMP 4/71 ▶	–
	7CA	5 482 217 * 808	1	RMP - NFP 4/71 ▶	–
	7CA	5 482 217 * 508	1	RMP - NFP 4/71 ▶	–
	7CA	5 482 217 * 400	1	RMP - NFP 7/75 ▶	–
					CALANDRE VORDERE VERKLEIDUNG GRILLE CALANDRA CALANDRA
	7AY	AY 853 121 A NFP	1	«201» ▶ 6/69	– **SANS TROU DE CLIGNOTANTS** – O. AUSSCHNITTE F. BLINKER – W/O PUNCHINGS F. LIGHTS – SIN RECORTES DE LUCES – SENZA FORI PER FANALINI
	7AY	*AY 853 122 A*	1	«405» - NFP ▶ 6/69	–
	7AY	AY 853 123 A	1	«808» - NFP ▶ 6/69	–
	7CA	*5 482 218 * 201*	1	RMP 9/69 ▶ 7/75 NFP	– **AVEC TROU DE CLIGNOTANTS** – M. AUSSCHNITTEN F. BLINKER – WITH PUNCHINGS F. LIGHTS – CON RECORTES DE LUCES – CON FORI PER FANALINI
	7CA	5 482 218 * 405	1	RMP 6/69 ▶	–
	7CA	5 482 218 * 808	1	RMP 6/69 ▶	–
	7CA	5 482 218 * 508	1	RMP 12/69 ▶	–
	7CA	5 482 218 * 400	1	RMP 7/75 ▶	–
3	7CA	*AY 856 201 A*	1	«201» - NFP ▶ 9/70	**PLANCHE DE BORD** ARMATURENBRETT DASHBOARD PLANCHA DE ABORDO CRUSCOTTO
	7CA	*AY 856 202 A*	1	«405» - NFP ▶ 9/70	–
	7CA	*AY 856 203 A*	1	«808» - NFP ▶ 9/70	–
		AY 856 288 A	1	«508» - NFP ▶ 9/70	–
	7CA	*AY 856 201 C*	1	«201» 9/70 ▶ 4/71 2 ϕ 75 - NFP	–
	7CA	*AY 856 202 C*	1	«405» 9/70 ▶ 4/71 2 ϕ 75 - NFP	–
	7CA	*AY 856 203 C*	1	«808» 9/70 ▶ 4/71 2 ϕ 75 - NFP	–
		AY 856 288 B	1	«508» 9/70 ▶ 4/71 2 ϕ 75 - NFP	–
	7CA	*5 433 832*	1	«201» 10/72 ▶ 9/74 RMP - NFP	–
	7CA	*5 433 833*	1	«405» 10/72 ▶ 9/74 RMP - NFP	–
	7CA	*5 433 834*	1	«808» 10/72 ▶ 9/74 RMP NFP	–
	7CA	*5 433 835* RP 5 489 958 * 508 DEO-75 515 005	1	«508» 10/72 ▶ 9/74 RMP	–
	7CA	*5 459 117 * 201*	1	NFP 9/74 ▶ 7/75	–
	7CA	*5 489 958 *405*	1	RMP - NFP 7/76 ▶ DEO 1 - 75 515 005	–
	7CA	*5 489 958 * 400*	1	7/76 ▶ RMP *5 459 117 * 400* DEO-75 515 005	–
	7CA	*5 489 958 * 808*	1	RMP - NFP 7/76 ▶ DEO 1 - 75 515 005	–
	7CA	*5 489 958 * 508*	1	RMP - NFP DEO 1 - 75 515 005	–

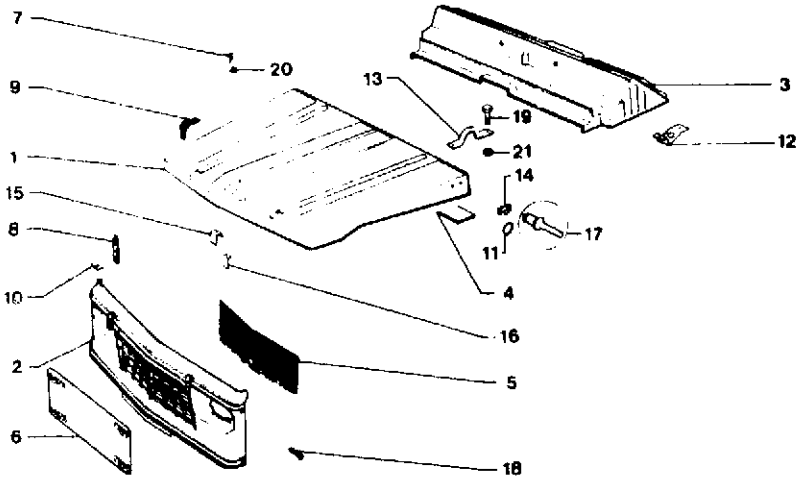

135 7-850-10

I	NUMEROS		K	▶ 7/77	DESIGNATIONS
4	7AY	AY 852 219 A			**RENFORT AR DE CAPOT (PRÉCISER LA TEINTE)** HINT. VERSTAERKUNG F. HAUBE (FARBE ANGEBEN) BONNET REINFORCEMENT REAR (STATE THE COLOUR) REFUERZO TRAS. DE CAPO (PRECISAR EL COLOR) RINFORZO POST. PER COFANO (PRECISARE LA TINTA)

5	7AY	*AY 853 285 B*	1	NFP RMP	11/70 ▶	**GRILLAGE** GRILL NETTING REJILLA GRILLA
6	7AY	AY 852 255 A NFP	1			**RIDEAU** KUELERJALOUSIE BLIND CORTINILLA MASCHERINA
7	7AY	AY 854 4	2		▶9/70	**CHEVRON** CITROEN-WINKEL CHEVRON CHEURRON EMBLEMA
	7AM	*AM 854 204 A*	2	NFP	9/70 ▶	–
8	7CA	AY 852 110 A	2			**SANGLE** SPANNBAND STRAP CINTURON CINGHIA
9	7CA	AY 852 109 A	2			**SANGLE AVEC BOUCLE** SPANNBAND MIT VERSCHLUSS STRAP WITH BUCKLE CINTURON CON ARGOLLA CINGHIA CON FIBBIA
10	7AY	AY 855 70	2			**PLAQUETTE** PLAKETTE PLAQUETTE PLAQUETA PLACCHETTA
11	8AA	5 413 581 NFP	2	RMP	▶4/71	**ANNEAU** RING RING ANILLO ANELLO
	7CA	5 405 384	2		4/71 ▶	**ANNEAU AVEC CROCHET** RING MIT HAKEN RING WITH HOOK ANILLO CON GANCHO ANELLO CON GANCIO
12	7CA	5 403 544	2		4/71 ▶	**SUPPORT** TRAEGER BRACKET SOPORTE SUPPORTO
13	7CA	5 403 728	2	LAT	4/71 ▶	**PATTE** EINRASTUNGLASCHE HOOKING LUG PATA STAFFA
14	8CA	P 972 88 · NFP	2		4/71 ▶	–
	7CA	*5 404 528* · NFP RP 95 404 528 AW	2		4/71 ▶	–
15	7CA	5 417 874	2	AR	4/71 ▶	–
16	7CA	5 417 875	2	AR	4/71 ▶	**RENFORT** VERSTAERKUNG REINFORCEMENT REFUERZO RINFORZO

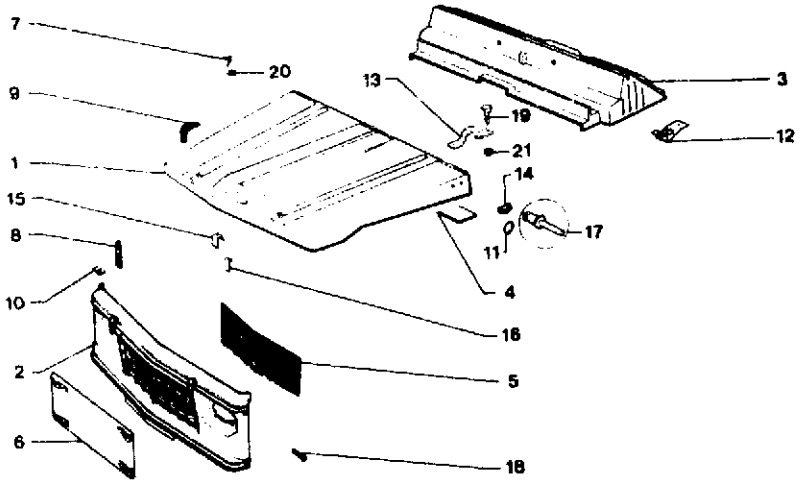

135 7-850-10

I	NUMEROS		K	▶ 7/77	DESIGNATIONS
17	7CA	ZC 9 618 792 U	?	«POP» φ4	**RIVET** NIET RIVET REMACHE RIVETTO
	7CA	26 187 959	?	«POP» φ4,8	–
	7CA	79 03 072 274	4	«POP» φ4	–
18	7CA	26 225 779	?	TR 7 x 25	**VIS** SCHRAUBE SCREW TORNILLO VITE
19	98F	23 728 019 - NFP	2	TH 7 x 70	–
	7CA	79 03 016 008	?	TR 42 x 9,5	–
	9TT	79 03 046 414	?	TR 4,85 x 19	–
	9GX	*79 03 101 283* RP 79 03 201 130	4	TH 5 x 16	–
	9TT	ZD 9 224 500 W	4	TR 4 x 35 - NFP	–
20	7TT	26 240 089 NFP	4	φ 3,5	**RONDELLE** SCHEIBE WASHER ARANDELA RONDELLA
	6TT	26 240 019	4	φ 5	–
	7GY	26 191 549 - NFP	2	7,25 x 25 x 3	–
21	9DA	ZD 9 226 900 Z NFP	4	HE 4 x 0,75	**ÉCROU** MUTTER NUT TUERCA DADO
	9TT	*ZD 9 231 900 U*	4	HE 5 x 0,75 - NFP	–
	9TT	79 03 032 036	?	HE 7 x 1,00	–
	9AS	79 03 032 003	4	HE 4 x 0,70	–
	9TT	79 03 032 006	4	HE 5 x 0,80 ARMÉE (24 V)	– **PIECES SPÉCIALES**
2	7CA	5 482 218 * 405	1		**CALANDRE VERT ARMÉE**
3	7CA	5 433 844	1	RMP 10/72 ▶ 9/74	**PLANCHE DE BORD VERT ARMÉE**
	7CA	5 489 960 * 405	1	7/76 ▶ RMP 9/74 ▶ 7/76	–
	7CA	5 477 066 * 405	1		**PLAQUE DE VISITE BATTERIE**
	7CA	5 418 709	2	φ 16 - E 3,5	**ARRETOIR DE PLAQUE**
	7CA	5 418 712	2	ENS XT	**VERROU DE PLAQUE** **PIECES SPÉCIALES** SPEZIALTEILE SPECIAL PARTS PIEZAS ESPECIALES PEZZI SPECIALI
2	7AY	AY 853 125 B NFP	1	«201» (USA) RMP 7/70 ▶ 1/72	**CALANDRE** VORDERE VERKLEIDUNG GRILLE CALANDRA CALANDRA
	7AY	*AY 853 126 B*	1	«405» (USA) - NFP RMP 7/70 ▶ 1/72	–
	7AY	AY 853 128 B NFP	1	«508» (USA) RMP 7/70 ▶ 1/72	–
3	7AY	5 433 837 NFP	1	(I) - RMP ▶ 4/71	**PLANCHE DE BORD** ARMATURENBRETT DASHBOARD PLANCHA ABORDO CRUSCOTTO
	7CA	*5 433 836*	1	«801» (I) (DK) - NFP RMP 10/72 ▶ 9/74	–
	7CA	*5 433 837*	1	«405» (I) (DK) - NFP RMP 10/72 ▶ 9/74	–

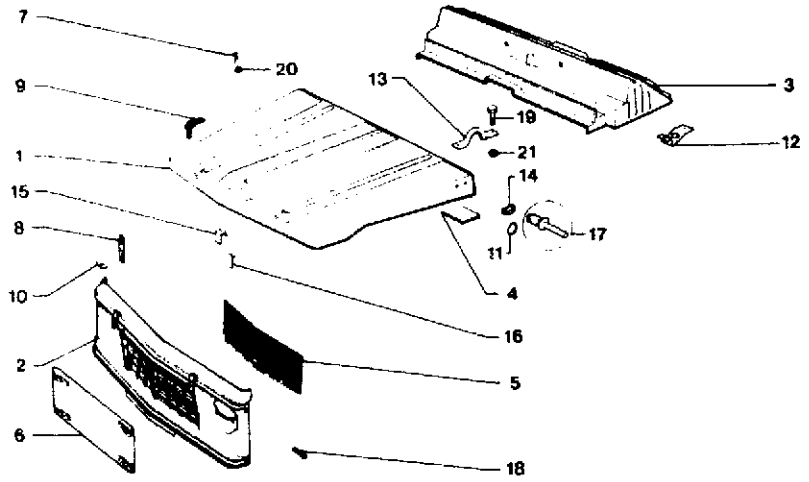

135 7-850-10

	NUMEROS		K	▷ 7/77	DESIGNATIONS
				XT	**PIECES SPECIALES (Suite)** SPEZIATEIL (Forts.) SPECIAL PARTS (Conts.) PIEZAS ESPECIALES (Cont.) PEZZI SPECIAL (Cont.)
3	7CA	5 433 838	1	«808» (I) (DK) - NFP 10/72 ▶ 9/74	**PLANCHE DE BORD** ARMATURENBRETT DASHBOARD PLANCHA ABORDO CRUSCOTTO
	7CA	5 433 839	1	«508» (I) (DK) - NFP RMP 10/72 ▶ 9/74	–
		AY 856 201 A	1	«201» (CH) - NFP	–
		AY 856 202 A	1	«405» (CH) - NFP	–
		AY 856 203 A	1	«808» (CH) - NFP	–
		AY 856 288 A	1	«508» (CH) - NFP	–
	7CA	5 433 840	1	«201» (CH) (S) (NL) (B) - NFP - 10/72 ▶ 9/74	–
	7CA	5 433 841	1	«405» (CH) (S) (NL) (B) - NFP - 10/72 ▶ 9/74	
	7CA	5 433 842	1	«808» (CH) (S) (NL) (B) - NFP - 10/72 ▶ 9/74	–
	7CA	5 433 843	1	«508» (CH) (S) (NL) (B) - NFP - 10/72 ▶ 9/74	–

137 **CAPOT – CALANDRE – PLANCHE DE BORD**
MOTORHAUBE – VORD. VERKLEIDUNG – ARMATURENBRETT
7-850-10-A **BONNET – GRILLE – DASHBOARD**
CAPO – CALANDRA – PLANCHA ABORDO
N-07 **COFANO MOTORE – CALANDRA – CRUSCOTTO**

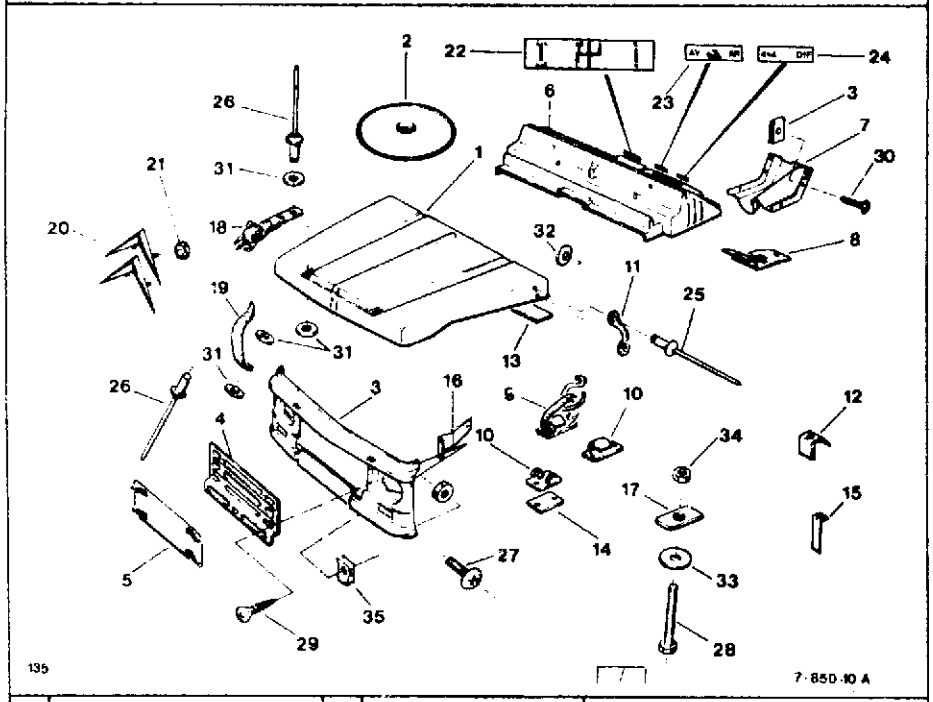

I	NUMEROS		K	7/77 ▶	DESIGNATIONS
1	7CA	*5 507 238 * 400*	1	1a	**CAPOT**
		RP 5 507 237 * 400			MOTORHAUBE
					BONNET
					CAPO
					COFANO MOTORE
	7CA	5 507 237 * 400	1	2a	–
	7CA	5 507 237 * 405	1		–
	7CA	5 507 237 * 508	1	▶3156	–
	7CA	5 507 237 * 524	1	▶3156	–
	7CA	5 507 237 * 824	1		–
	7CA	5 507 237 * 811	1	«AZUR»	–
	7CA	95 541 599 * 405	1	4 x 4	–
	7CA	95 541 599 * 508	1	4 x 4 ▶3156	–
	7CA	95 541 599 * 524	1	4 x 4 ▶3156	–
	7CA	95 541 599 * 824	1	4 x 4	–

2	7CA	95 539 645 * 405 NFP	1		**COUVERCLE ROUE DE SECOURS**
					DECKEL FUER RESERVERAD
					COVER FOR SPARE WHEEL
					TAPA DE RUEDA DE REPUESTO
					COPERCHIO PER RUOTA DISCORTA
	7CA	95 539 645 * 508	1	4 x 4 ▶3156	–
	7CA	*95 539 645 * 524*	1	4 x 4 - NFP ▶3156	–
	7CA	95 539 645 * 824	1	4 x 4 - NFP	–
3	7CA	5 507 658 * 400	1		**HABILLAGE AVANT**
					VORDERE VERKLEIDUNG
					FRONT COVERING
					REVESTIMIENTO DELANT.
					RIVESTIMENTO ANT.
	7CA	5 507 658 * 405	1		–
	7CA	5 507 658 * 508	1	▶3156	–
	7CA	5 507 658 * 524	1	▶3156	–
	7CA	5 507 658 * 824	1		–
	7CA	5 507 658 * 811	1	«AZUR»	–
4	7CA	5 506 593 * 400	1	▶7/79	**CALANDRE**
					GRILL
					GRILLE
					CALANDRA
					CALANDRA
	7CA	5 506 593 * 405	1		–
	7CA	5 506 593 * 508	1	▶3156	–
	7CA	5 506 593 * 824	1		–
	7CA	5 506 593 * 524	1	7/79▶3156	–
	7CA	95 591 830	1	«AZUR»	–
5	7CA	5 507 724	1		**ÉCRAN DE CALANDRE**
					ABSCHIRMUNG F. VERKLEIDUNG
					GRILLE SCREEN
					PANTALLA DE CALANDRA
					SCHERMO PER CALANDRA
6	7CA	5 489 958 * 400 NFP	1	▶7/78	**PLANCHE DE BORD**
					ARMATURENBRETT
					DASHBOARD
					PLANCHA ABORDO
					CRUSCOTTO
	7CA	5 489 958 * 405	1	▶7/78	–
	7CA	*5 489 958 * 508*	1	NFP ▶7/78	–
	7CA	5 489 958 * 824	1	NFP ▶7/78	–
	7CA	75 523 308 * 400	1	7/78 ▶7/79	
	7CA	75 523 308 * 405	1	7/78 ▶	–
	7CA	75 523 308 * 508	1	7/78 ▶3156	–
	7CA	75 523 308 * 824	1	7/78 ▶	–
	7CA	75 523 308 * 524	1	7/79 ▶3156	–
	7CA	95 538 523 * 405	1	4 x 4 - NFP	–
	7CA	*95 538 523 * 508*	1	4 x 4 - NFP ▶3156	–
	7CA	95 538 523 * 524	1	4 x 4 ▶3156	–
	7CA	95 538 523 * 824	1	4 x 4	–
	7CA	95 538 523 * 811	1	«AZUR»	–
7				INF 7/78 ▶	**BOITIER**
					GEHAEUSE
					CASING
					CAJA
					SCATOLA
	7CA	75 523 316 * 400	1	NFP ▶7/79	–
	7CA	75 523 316 * 405	1		–
	7CA	75 523 316 * 508	1	▶3156	–
	7CA	75 523 316 * 824	1		–
	7CA	75 523 316 * 524	1	7/79 ▶3156	–
	7CA	75 523 316 * 811	1	«AZUR»	–

CAPOT – CALANDRE – PLANCHE DE BORD (Suite)
MOTORHAUBE – VORD. VERKLEIDUNG – ARMATURENBRETT (Forts.)
BONNET – GRILLE – DASHBOARD (Cont.)
CAPO – CALANDRA – PLANCHA ABORDO (Cont.)
COFANO MOTORE – CALANDRA– CRUSCOTTO (Cont.)

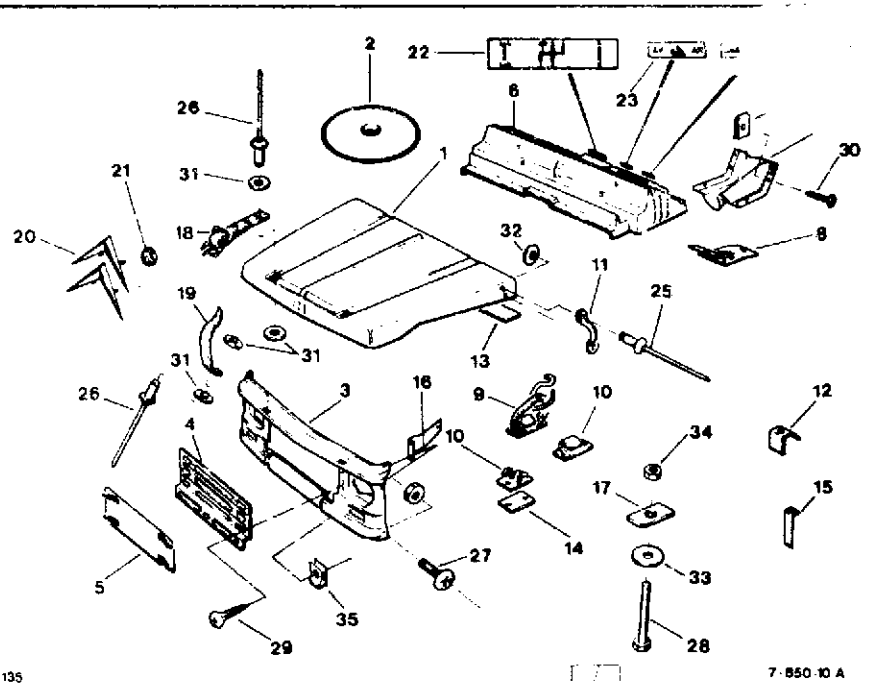

I	NUMEROS		K	7/77 ▶	DESIGNATIONS
8	7CA	5 403 544	2		**SUPPORT** TRAEGER BRACKET SOPORTE SUPPORTO
9	7CA	5 405 384	2		**ANNEAU AVEC CROCHET** RING MIT HAKEN RING WITH HOOK ANILLO CON GANCHO ANELLO CON GANCIO

10	7CA	95 404 528 AW NFP	2				**PATTE FIXATION CAPOT** BEFEST.-LASCHE F. HAUBE SECURING LUG F. BONNET PATA DE SUJECION DE CAPO STAFFA FISSAGGIO COFANO
	7CA	95 404 528 XA	2	«AZUR»			–
	7CA	95 545 061	1	G - 4 x 4			–
	7CA	95 538 497	1	D - 4 x 4			–
11	7CA	5 403 726	2	LAT			**PATTE** LASCHE LUG PATA STAFFA
12	7CA	5 417 874	2	AR			–
13	7AY	AY 852 219 A	1				**RENFORT** VERSTAERKUNG REINFORCEMENT REFUERZO RINFORZO
14	7CA	95 538 498	2	4 x 4			–
	7CA	95 583 936	2			7/82 ▶	–
15	7CA	5 417 875	2	AR			–
16	7CA	75 516 838	2				–
17	7AY	AY 855 70	2	INF			**PLAQUETTE** PLAKETTE PLAQUETTE PLAQUETA PLACCHETTA
18	7AY	AY 852 109 A	2			▶ 6/81	**SANGLE** SPANNBAND STRAP CINTURON CINGHIA
	7CA	95 572 005 XA	2			6/81 ▶	–
	7CA	95 572 005 WB	2	«AZUR»			–
19	7AY	AY 852 110 A	2			▶ 6/81	–
	7CA	95 572 004 XA	2			6/81 ▶	–
	7CA	95 572 004 WB	2	«AZUR»			–
20	7RB	75 472 869	1				**ENSEMBLE CHEVRONS** SATZ CITROEN-ZEICHEN CHEVRONS SET CONJUNTO CHEURRONES INSIEME EMBLEMA
21	7TT	26 240 089 NFP	4	«QUICKIE»			**RONDELLE** SPERRSCHEIBE LOCKING WASHER ARANDELA DE BLOQUEO RONDELLA ARRESTO
22	7CA	95 538 941	1	4 x 4			**MONOGRAMME REPERE VITESSES** SCHALTSCHEMA GEAR-CHANGE DIAGRAM ESQUEMA CAMBIO MARCHAS INSEGNA CAMBIO MARCE
23	7CA	95 538 944 NFP	1	4 x 4			**MONOGRAMME DE FREINS** SINNBILD BREMSE BRAKE SIGN MARCA FRENO INSEGNA FRENO
24	7CA	95 538 942	1	4 x 4			**MONOGRAMME DIFFÉRENTIEL** DIFFERENTIAL MONOGRAMM DIFFERENTIAL MONOGRAM MONOGRAMMA DIFERENCIAL MONOGRAMMA DIFFERENZIALE

CAPOT – CALANDRE – PLANCHE DE BORD (Suite)
MOTORHAUBE – VORD. VERKLEIDUNG – ARMATURENBRETT (Forts.)
BONNET – GRILLE – DASHBOARD (Cont.)
CAPO – CALANDRA – PLANCHA ABORDO (Cont.)
COFANO MOTORE – CALANDRA – CRUSCOTTO (Cont.)

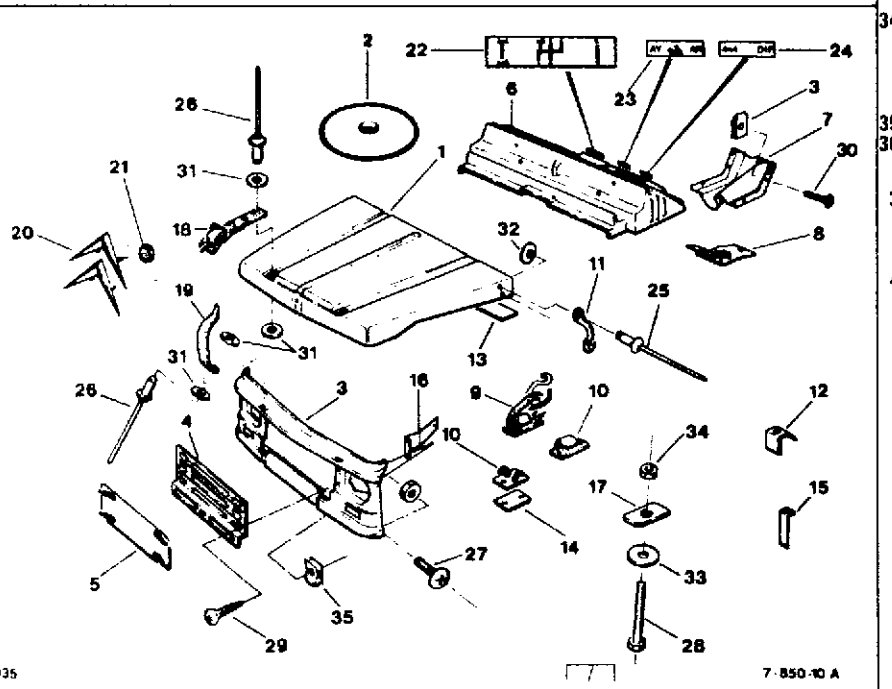

I	NUMEROS		K	7/77 ▶	DESIGNATIONS
26	7CA	79 03 072 274	?		**RIVET** NIET RIVET REMACHE RIVETTO
27	7CA	26 225 779	4	ϕ 7	**VIS** SCHRAUBE SCREW TORNILLO VITE
28	9RB	23 452 319	4	TH 7 x 70	–
29	9TT	79 03 016 414	8		–
30	7CA	79 03 016 008	4	TR 4,2 x 9,5 7/78 ▶	–
31	9DA	22 770 069	12	ϕ 5,5 x 12	**RONDELLE** SCHEIBE WASHER ARANDELA RONDELLA
32	9AA	22 768 019 - NFP	4	ϕ 4,25 x 12	–
33	7AM	*26 191 549* RP 79 03 053 496	2	ϕ 7 x 25	–
34	9TT	25 241 009 NFP	?	HE 7 x 1,00	**ÉCROU** MUTTER NUT TUERCA DADO
35	7CA	26 159 879	B		–
36	7CA	79 03 046 048	4	ϕ 4,2 7/78 ▶ ARMÉE (24 V)	–
					PIECES SPÉCIALES
3	7CA	*75 518 425 * 405* RP 5 507 659 * 405	1		**HABILLAGE AV.**
	7CA	5 507 659 * 405	1		**HABILLAGE AV. - NU**
4	7CA	5 489 960 * 405	1		**PLANCHE DE BORD**
	7CA	5 477 066 * 405	1		**PLAQUE DE VISITE DE BATTERIE**
	7CA	5 418 709	2	ϕ 16 - E 3,5	**ARRETOIR DE PLAQUE**
	7CA	5 418 712	2	ENS	**VERROU DE PLAQUE**
	7CA	95 545 161	1	4 x 4 - LON 2010	**JOINT EMPREINTE CAPOT**

137

7-854-10

N-04

DÉCORS ADHÉSIFS
KLEBEVERZIERUNGEN
ADHESIVE EMBELLISHMENTS
ADORNOS ADHESIVOS
ABBELLIMENTI ADESIVI

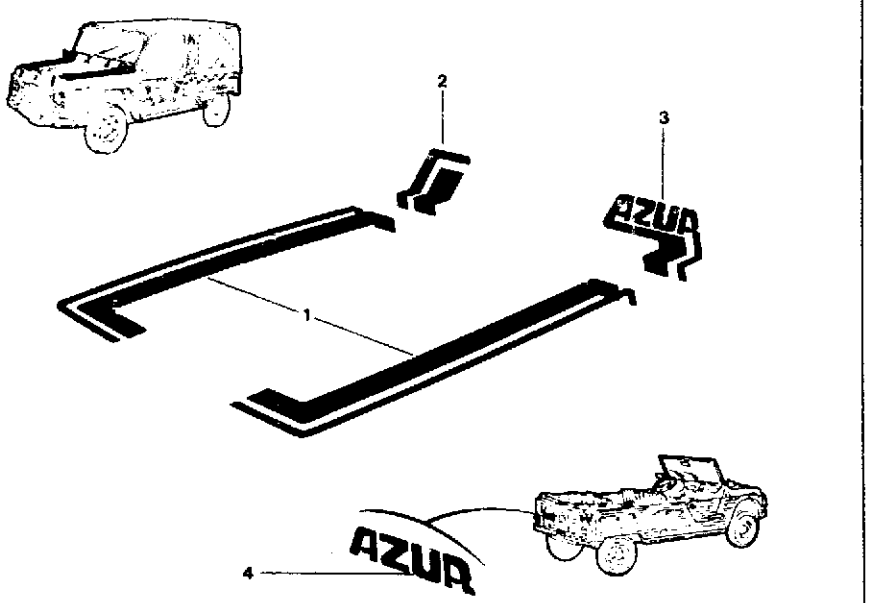

135

7.854.10

1	NUMEROS		K	«AZUR»	DESIGNATIONS
					DÉCOR ADHÉSIF SUR : KLEBEVERZIERUNG ADHESIEVE EMBELLISHMENT ADORNO ADHESIVO ABBELLIMENTO ADESIVO
1	7CA	95 591 839	1	G	– **CAPOT MOTEUR** – AN MOTORHAUBE – ON BONNET – SOBRE CAPO – SUL COFANO MOTORE
	7CA	95 591 840	1	D	–
2	7CA	95 591 841	1	D	– **AUVENT** – AM WINDFANGBLECH – ON LATERAL SCUTTLE – SOBRE LATERAL SALPICAD. – SULLA CAPPA
3	7CA	95 591 838	1	G	**MONOGRAMME SUR AUVENT** MONOGRAM AM W.-F.-BLECH MONOGRAM ON LAT. SCUTTLE MONOGRAMA SOBRE LAT. SALP. MONOGRAMMA SU CAPA
4	7CA	95 591 837	1	AR	**MONOGRAMME** MONOGRAMM MONOGRAM MONOGRAMA MONOGRAMMA

SERRURES ET POIGNÉES
TUERSCHLOESSER UND GRIFFE
LOCKS AND HANDLES
CERRADURAS Y MANECILLAS
SERRATURE E MANIGLIE

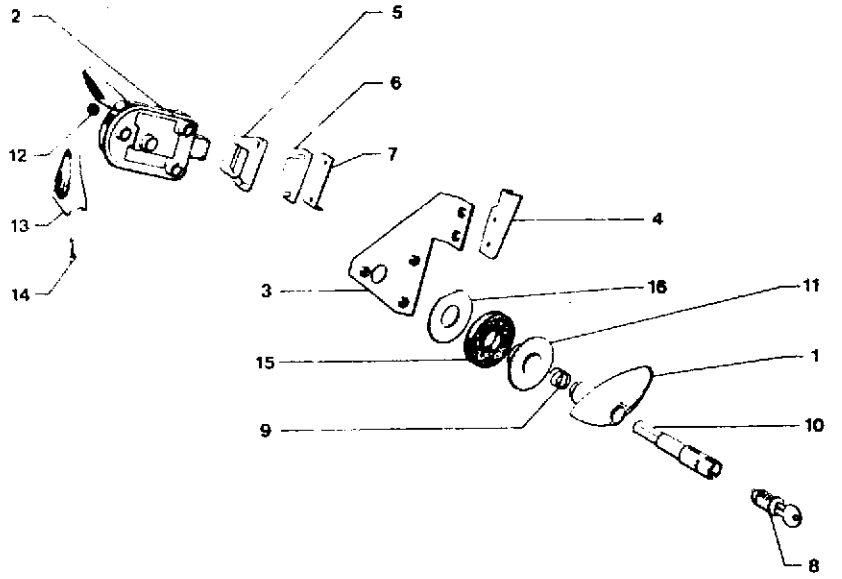

I	NUMEROS		K	4/71▶ 6/76	DESIGNATIONS
1	7AA	AZ 861 76 E	1	G	**POIGNÉE** TUERGRIFF HANDLE MANECILLA MANIGLIA
	7AA	*AZ 861 3 C* RP 95 412 059 DEO 5 412 934	1	D	—
2	7CA	5 411 528 **NFP**	1	G	**SERRURE** TUERSCHLOSS LOCK CERRADURA SERRATURA
	7AA	AZ 861 9 D	1	D	—
3	7CA	5 403 597 **NFP**	1	G	**RENFORT DE SERRURE** VERSTAERKUNGSBLECH LOCK REINFORCEMENT REFUERZO DE CERRADURA RINFORZO DELLA SERRATURA
	7CA	5 403 598	1	D	—
4	7CA	5 403 599	1	G	**GOUTTIERE D'ARRET** HALTERINNE STOP CHANNEL CANALEJA DE TOPE CANALINO D'ARRESTO
	7CA	5 403 600	1	D	—
5	7CA	5 403 554	2		**GACHE DE FERMETURE** SCHLOSSFALLE STRIKING BOX CERRADERO BOCCHETTA
6	7CA	5 403 555	?	E 2 - NFP	**CALE DE GACHE** UNTERLAGE F. SCHLOSSFALLE PACKING F. STRIKING BOX SUPLEMENTO DE CERRADERO SPESSORE PER BOCCHETTA
7	7CA	*5 411 262*	2	NFP	**RENFORT DE GACHE** VERSTAERKUNG F. SCHLOSSFALLE STRIKING BOX REINFORCEMENT REFUERZO DE CERRADERO RINFORZO PER BOCCHETTA
8	7CA	5 414 443	1		**JEU DE 3 BARILLETS** SATZ SCHLOSSEINSAETZE (3) THREE-BARREL SET JUEGO DE 3 BARRILETES SERIE DI 3 BARILETTI
	7CA	*5 414 444* RP 5 414 443	1		**JEU DE 2 BARILLETS** SATZ SCHLOSSEINSAETZE (2) TWO-BARREL SET JUEGO DE 2 BARRILETES SERIE DI 2 BARILETTI
9	7AA	AZ 861 34	2		**RESSORT D'EMBASE** FEDER SPRING MUELLE MOLLA
10	7AA	AZ 861 72 G	1		**BROCHE SANS BARILLET** KLINKENZAPFEN O. EINSATZ SPINDLE WITHOUT BARREL BROCHE SIN BARRILETE SPINA SENZA BARILETTO
11	7AA	AZ 861 75 A	2	EXT	**EMBASE** ROSETTE ESCUTCHEON ESCUDO BASETTA
12	7AA	AZ 861 124	2	3 x 8 x 2	**BAGUE D'ÉTANCHEITÉ** HUELSE BUSH CASQUILLO BOCCOLA
13	7AA	AZ 861 196 **NFP**	2		**EMBOUT DE POIGNÉE** ENDSTUECK F. GRIFF HANDLE ENDPIECE TERMINAL DE MANECILLA TERMINALE DELLA MANIGLIA

SERRURES ET POIGNÉES (Suite)
TUERSCHLOESSER UND GRIFFE (Forts.)
LOCKS AND HANDLES (Cont.)
CERRADURAS Y MANECILLAS (Cont.)
SERRATURE E MANIGLIE (Cont.)

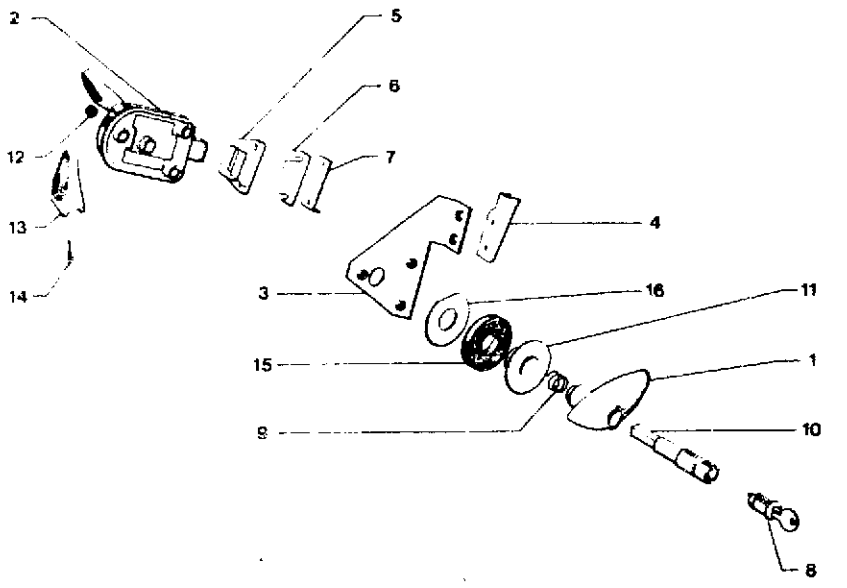

I	NUMEROS		K	4/71 ▶ 6/76	DESIGNATIONS
14	9TT	79 03 016 414	2	TR 4,85 x 19	**VIS** SCHRAUBE SCREW TORNILLO VITE
	9TT	79 03 007 102	4	TR 5 x 14	–
	9GX	79 03 004 090	4	TF8 5 x 25	–
	9TT	ZD 9 468 230 W	2	TF8 5 x 14 - NFP	–
	9TT	ZD 9 468 800 Z	6	TR 5 x 35	–
15	7AA	AZ 861 84 NFP	2	23 x 45 x 6	**RONDELLE** SCHEIBE WASHER ARANDELA RONDELLA
16	7AA	AZ 861 91 A	2	23 x 46 x 1	–

137

7-861-10-A

N-01 →

SERRURES ET POIGNÉES
TUERSCHLOESSER UND GRIFFE
LOCKS AND HANDLES
CERRADURAS Y MANECILLAS
SERRATURE E MANIGLIE

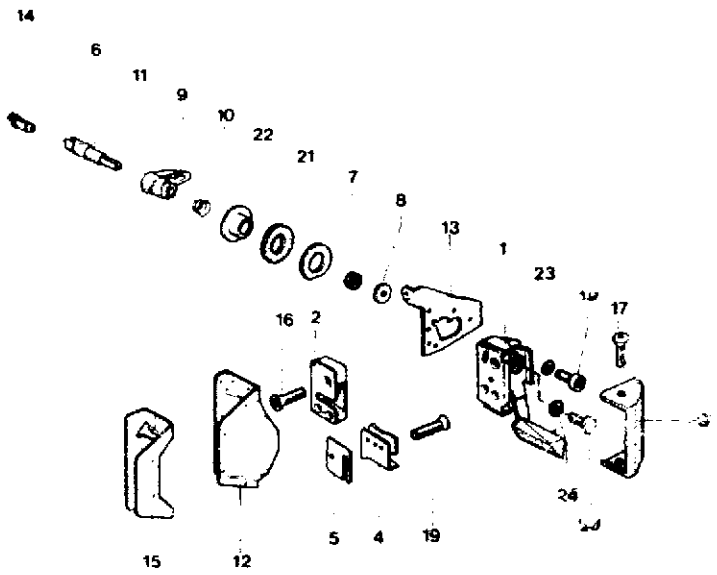

7-861-10 A

1	NUMEROS		K	6/76 ►	DESIGNATIONS
1	7CA	5 477 735	1	G	**PLATINE DE SERRURE** SCHLOSSBLECH LOCK PLATE PLATINA DE CERRADURA LAMIERA SERRATURA
	7CA	5 477 736	1	D	–
2	7AZ	5 451 522	1	G	**BOITIER** GEHAEUSE LOCK BOX CAJA SCATOLA
	7AZ	5 451 523	1	D	–
3	7AZ	5 410 753	1	G ► 7/76	**BOITIER DE PROTECTION** SCHUTZGEHAEUSE PROTECTION BOX CAJA DE PROTECCION SCATOLA PROTEZIONE
	7AZ	5 486 233 * 700	1	G 7/76 ►	–
	7AZ	5 410 756	1	D ► 7/76	–
	7AZ	5 486 234 * 700	1	D 7/76 ►	–
4	7AZ	5 410 744	1	G	**GACHE** SCHLOSSFALLE STRIKING BOX CERRADERO BOCCHETTA
	7AZ	5 410 745	1	D	–
5	7AZ	5 410 751	?		**CALE DE GACHE** UNTERLAGE F. SCHLOSSFALLE STRIKING BOX PACKING SUPLEMENTO DEL CERRADERO SPESSORE PER BOCCHETTA
6	7AZ	5 410 758	2		**BROCHE** KLINKENZAPFEN SPINDLE BROCHE SPINA
7	7AZ	5 412 058	2		**BUTÉE DE POIGNÉE** ANSCHLAG F. GRIFF HANDLE STOP TOPE DE MANECILLA REGGISPINTA MANIGLIA
8	7AZ	5 412 060	2		**ENTRETOISE** ABSTANDSSTUECK SPACER SEPARADOR DISTANZIALE
9	7AA	AZ 861 34	2		**RESSORT D'EMBASE** FEDER F. ROSETTE ESCUTCHEON SPRING MUELLE DE BASE MOLLA PER BASETTA
10	7AA	AZ 861 75 A	2	16 x 48 x 17,5	**EMBASE** ROSETTE ESCUTCHEON BASE BASETTA
11	7AA	AZ 861 76 E	2	EAT	**POIGNÉE** TUERGRIFF HANDLE MANECILLA MANIGLIA
12	7CA	5 477 743 * 400	1	G-NFP ► 7/79	**SUPPORT GACHE** TRAEGER F. SCHLOSSFALLE STRKING BOX BRACKET SOPORTE DE CERRADERO SUPPORTO PER BOCCHETTA
	7CA	5 477 743 * 405	1	G	–
	7CA	5 477 743 * 508	1	G ► 3156	–
	7CA	5 477 743 * 808	1	G-NFP ► 7/77	–
	7CA	5 477 743 * 824	1	G 7/77 ►	–
	7CA	5 477 743 * 524	1	G 7/79 ► 3156	–
	7CA	5 477 743 * 811	1	G-«AZUR»	–
	7CA	5 477 744 * 400	1	D ► 7/79	–
	7CA	5 477 744 * 405	1	D	–
	7CA	5 477 744 * 508	1	D ► 3156	–

SERRURES ET POIGNEES (Suite)
TUERSCHLOESSER UND GRIFFE (Forts.)
LOCKS AND HANDLES (Cont.)
CERRADURAS Y MANECILLAS (Cont.)
SERRATURE E MANIGLIE (Cont.)

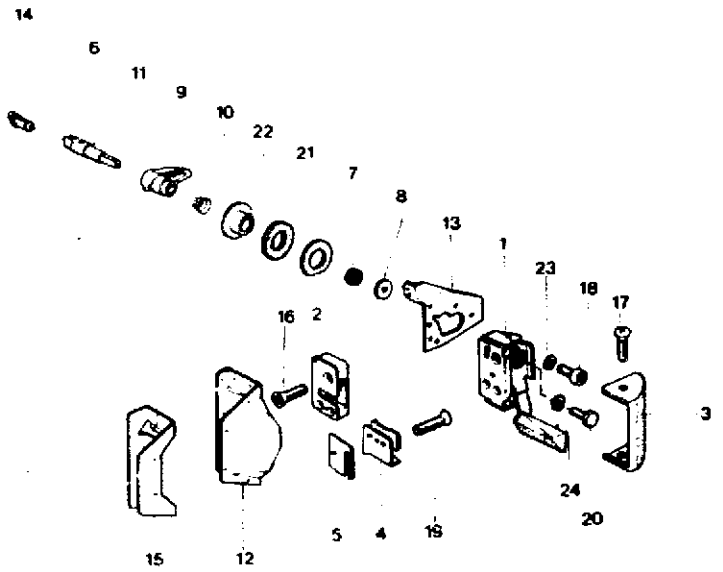

I	NUMEROS		K	6/76 ▶	DESIGNATIONS
12	7CA	*5 477 744 * 808*	1	D - NFP ▶ 7/77	**SUPPORT GACHE (Suite)** TRAEGER F. SCHLOSSFALLE (Forts.) STRIKING BOX BRACKET (Cont.) SOPORTE DE CERRADERO (Cont.) SUPPORTO PER BOCCHETTA (Cont.)
	7CA	5 477 744 * 824	1	D 7/77 ▶	–
	7CA	5 477 744 * 524	1	D 7/79 ▶ 3156	–
	7CA	5 477 744 * 811	1	D - «AZUR»	–
13	7CA	5 476 852	1	G	**RENFORT DE SERRURE** VERSTAERKUNG F. SCHLOSS LOCK REINFORCEMENT REFUERZO DE CERRADURA RINFORZO PER SERRATURE
	7CA	5 476 853	1	D	–

14	7CA	5 491 210	1		**JEU DE BARILLETS** SATZ SCHLOSSEINSAETZE BARREL SET JUEGO DE BARRILETES SERIE BARILETTI
15	7CA	5 502 438	2		**RENFORT DE FIXAT. DE GACHE** VERSTAERKUNG F. SCHLOSSF. STRIKING BOX REINFORCEMENT REFUERZO DEL CERRADERO RINFORZO PER BOCCHETTA
16	7HA	5 451 524	6		**VIS** SCHRAUBE SCREW TORNILLO VITE
17	9AZ	79 03 005 061	4	TFB 4 x 14	–
18	7AZ	26 214 149	4	CHC 6 x 16	–
19	7MA	26 213 969	4	FHC 6 x 35 ▶ 12/78	–
	7MA	26 214 309	4	FHC 6 x 28 12/78 ▶	–
20	9AA	*23 658 019* RP 79 03 201 010	2	TH 5 x 10	–
21	7AA	AZ 861 91 A	2	«NYLON» 23 x 46 x 1	**RONDELLE** NYLON-SCHEIBE NYLON WASHER ARANDELA RONDELLA
22	7AA	AZ 861 84 - NFP	2	CC - 23 x 45 x 6	–
23	9TT	22 385 019 - NFP	4	CR⌀ 6	–
24	9TT	22 334 019 - NFP	2	⌀ 5	–

137

7-961-10

P-02

PARE-BRISE – RÉTROVISEUR EXTÉRIEUR
WINDSCHUTZSCHEIBE – RUECKBLICKSPIEGEL AUSSENSEITE
WINDSCREEN – EXTERNAL REAR VIEW MIRROR
PARABRISAS – RETROVISOR EXTERIOR
PARABREZZA – RETROVISORE ESTERNO

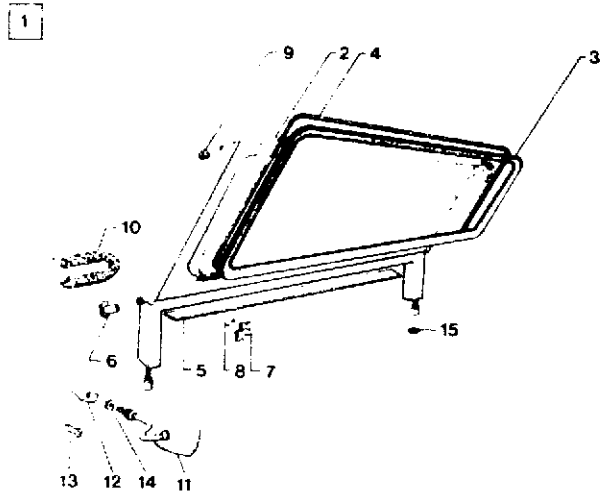

135

7-961-10

I	NUMEROS	K	▶ 4/71	DESIGNATIONS
	1°: FIXE (FESTSTEHEND, FIXED, FIJO, FISSO) — 2°: RABATTABLE (UMKLAPPBAR, FOLDING-DOWN, ABATIBLE, RIBALTABILE)			
1	7CA *5 403 725* RP 95 570 639	1	2° - RMP 1° 6/69 ▶ DEO 1 - 5 433 846	**PARE-BRISE** WINDSCHUTZSCHEIBE WINDSCREEN PARABRISAS PARABREZZA
	7AY *AY 961 011 B* RP 95 570 639 DEO 5 433 846		2° 9/69 ▶	–

2	7AY	*AY 961 201 A*	1	1° - NFP		**GLACE** GLASSCHEIBE WINDSCREEN GLASS CRISTAL CRISTALLO
	7AY	*AY 961 202 A*	1	2° - NFP		–
3	7AY	AY 961 203 A	1	1°		**SCELLEMENT** EINFASSUNG SEALING ENGASTE GUARNIZIONE
	7AY	AY 961 204 A	1	2°		–
4	7AA	*AY 961 205 A*	1	1° - NFP		**CLÉ** KOEDER SEAL WEDGE CIERRE GRAFFATURA
		AY 961 206 A	1	2° - NFP		–
5	7CA	5 433 847	1			**BANDE D'ÉTANCHÉITÉ** ABDICHTSTREIFEN SEALING STRIP BANDA DE ESTANQUEIDAD NASTRO DI TENUTA
6	7AY	*AY 961 396 A*	2	NFP		**BUTÉE PLASTIQUE** PLASTIK-ANSCHLAG PLASTIC STOP TOPE PLASTICO REGGISPINTA PLASTICA
7	7CA	*AY 961 263 A*	2	NFP		**BOUTON DE RÉGLAGE** EINSTELLKNOPF ADJUSTING KNOB BOTON DE REGLAJE BOTTONE DI REGOLAZIONE
8		*AY 961 264 A*	2	NFP		**ENTRETOISE** ABSTANDSSTUECK SPACER SEPARADOR DISTANZIALE
9		A 436 1 A NFP	2			**BUTÉE** ANSCHLAG STOP TOPE REGGISPINTA
10	7AA	AU 844 61 NFP	2			**SANGLE** HALTESAND STRAP CINTURON CINGHIA
11	7CA	5 415 143	2	EXT	12/70 ▶	**RÉTROVISEUR** RUECKBLICKSPIEGEL REAR VIEW MIRROR RETROVISOR RETROVISORE
12	7CA	AY 551 102 A	2		6/69 ▶	**SUPPORT** TRAEGER BASE SOPORTE SUPPORTO

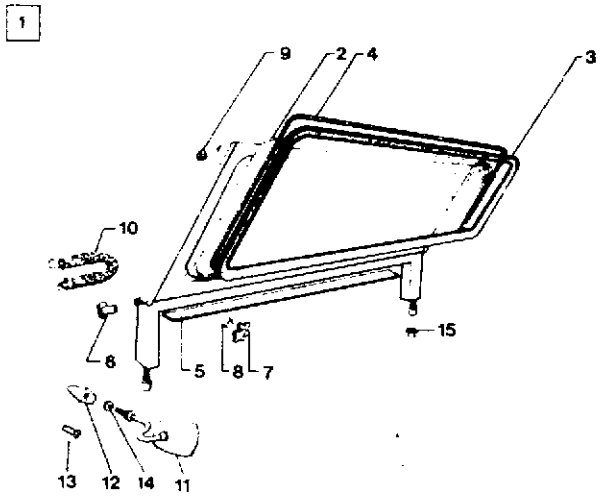

135 7-961-10

I	NUMEROS		K	▶ 4/71	DESIGNATIONS
13	9TT	23 857 019	2	TH 9 x 38	**VIS** SCHRAUBE SCREW TORNILLO VITE
	5TT	26 136 829 - NFP	6	TR 5 x 10 6/69 ▶	–
14	7AM	*AMB 551 95*	1	NFP ▶ 6/69	**RONDELLE** SCHEIBE WASHER ARANDELA RONDELLA
15	9TT	95 623 753	2	H 9 x 1,25 - H 7,5	**ÉCROU** MUTTER NUT TUERCA DADO
				(USA)	**PIECES SPÉCIALES** SPEZIALTEILE SPECIAL PARTS PIEZAS ESPECIALES PEZZI SPECIALI
1	7CA	*5 405 380* RP 95 570 639	1	2o	**PARE-BRISE** WINDSCHUTZSCHEIBE WINDSCREEN PARABRISAS PARABREZZA
2	7AY	*AY 961 207 A*	1	1o - NFP 7/69 ▶	**GLACE** GLASSCHEIBE WINDSCREEN GLASS CRISTAL CRISTALLO
11	7CA	*5 415 142*	2	EXT - NFP 12/70 ▶	**RÉTROVISEUR** RUECKBLICKSPIEGEL REAR VIEW MIRROR RETROVISOR RETROVISORE

137 **PARE-BRISE – RÉTROVISEUR EXTÉRIEUR**
WINDSCHUTZSCHEIBE – RUECKBLICKSPIEGEL AUSSENSEITE
7-961-10-A **WINDSCREEN – EXTERNAL REAR VIEW MIRROR**
PARABRISAS – RETROVISOR EXTERIOR
P-04 **PARABREZZA – RETROVISORE ESTERNO**

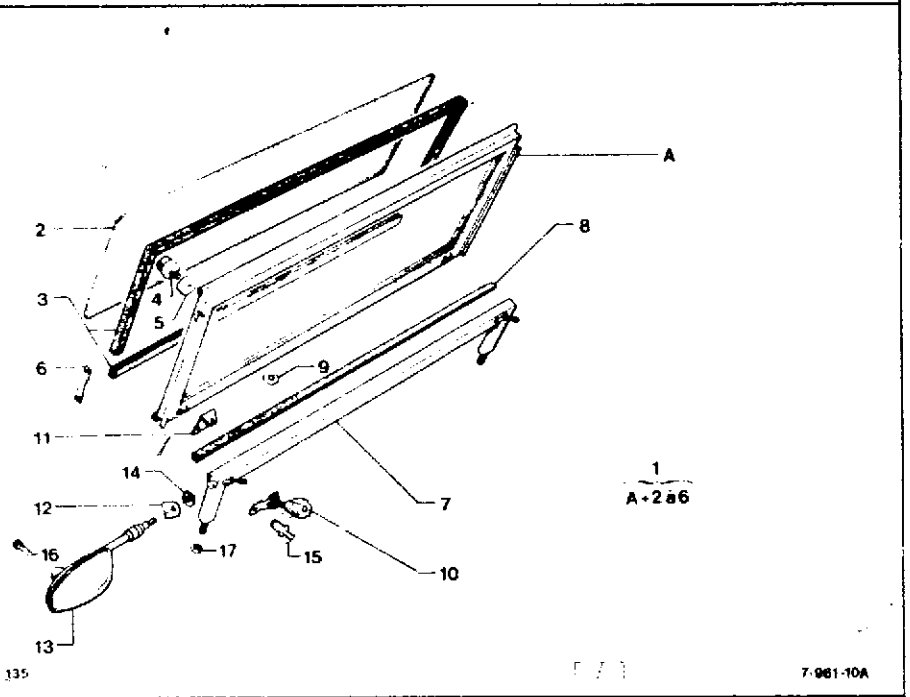

I	NUMEROS		K	4/71 ▶	DESIGNATIONS
1	7CA	*5 403 725* RP 95 570 639	1	ENS ▶ 7/83	**PARE-BRISE TREMPÉ** SCHEIBE, GEHÄRTET W-SCREEN, TEMPERED PARABRISAS TEMPLADO PARABREZZA TEMPERATO
	7CA	*95 591 836* RP 95 616 729	1	ENS- «AZUR» ▶ 7/83	—
	7CA	95 570 639	1	ENS 7/83 ▶	**PARE-BRISE FEUILLETÉ** SCHEIBE, GESCHICHTET W-SCREEN, LAMINATED PARABRISAS OJALDRADO PARABREZZA LAMINATO
	7CA	95 616 729	1	ENS - «AZUR» 7/83▶	—

2	7CA	*5 403 729* RP 95 570 107	1			**GLACE TEMPÉE** SCHEIBE, GEHÄRTET GLASS, TEMPERED CRISTAL TEMPLADO CRISTALLO TEMPERATO
	7CA	95 570 107	1		7/83 ▶	**GLACE FEUILLETÉE** SCHEIBE, GESCHICHTET GLASS, LAMINATED CRISTAL OJALDRADO CRISTALLO LAMINATO
3	7CA	5 417 934	1	SUP		**JOINT** DICHTUNG SEALING JUNTA GUARNIZIONE
	7CA	5 417 935	1	INF		—
4		AZ 437 1 B	2	SUP		**BUTÉE** ANSCHLAG STOP TOPE REGGISPINTA
5		AZ 437 89 B	2	SUP		**ENTRETOISE** ABSTANDSSTUECK SPACER SEPARADOR DISTANZIALE
6	7CA	5 403 728	2			**PATTE** LASCHE LUG PATA STAFFA
7	7CA	5 433 846	1	INF RMP	10/72 ▶	**CADRE** RAHMEN FRAME CUADRO QUADRO
8	7CA	5 433 847	1	RMP	10/72 ▶	**BANDE D'ÉTANCHÉITÉ** ABDICHTSTREIFEN SEALING STRAP BANDA DE ESTANQUEIDAD NASTRO DI TENUTA
9	7CA	5 433 848	2	12 - E 5,5	10/72 ▶	**RONDELLE D'APPUI** ANLAUFSCHEIBE THRUST WASHER ARANDELA DE APOYO RONDELLA D'APPOGGIO
10	7CA	5 413 827	2			**BOUTON** KNOPF KNOB BOTON BOTTONE
11	7CA	5 413 828	2			**PATTE** LASCHE LUG PATA STAFFA
12	7CA	5 417 877	2			—
13	7CA	5 415 143	2			**RÉTROVISEUR** RUECKBLICKSPIEGEL REAR VIEW MIRROR RETROVISOR RETROVISORE
	7CA	95 591 844 RP 5 415 143	2	«AZUR»		—

137 **PARE-BRISE – RÉTROVISEUR EXTÉRIEUR (Suite)**
WINDSCHUTZSCHEIBE – RUECKBLICKSPIEGEL AUSSENSEITE (Forts.)
7-961-10-A WINDSCREEN – EXTERNAL REAR VIEW MIRROR (Cont.)
PARABRISAS – RETROVISOR EXTERIOR (Cont.)
P-05 PARABREZZA – RETROVISORE ESTERNO (Cont.)

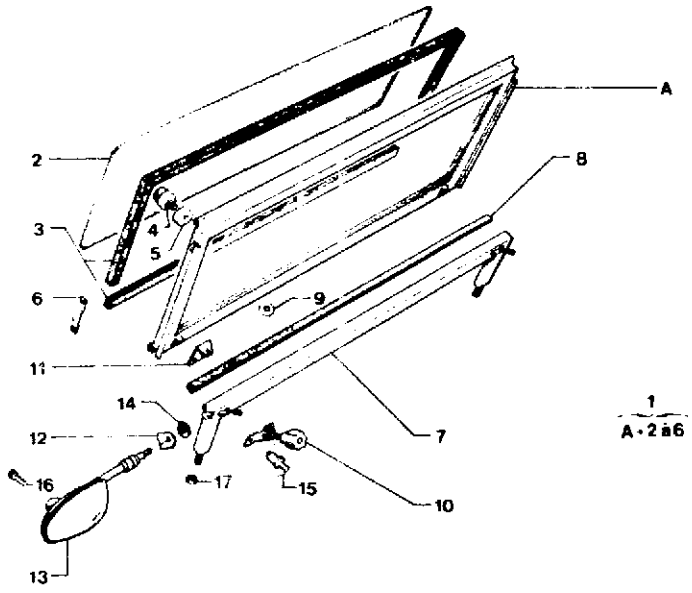

I	NUMEROS		K	4/71 ▶	DESIGNATIONS
14	7CA	75 517 249	2	1/78 ▶	**BAGUE DE RÉTROVISEUR** HUELSE RUECKBLICKSPIEGEL BUSH REAR VIEW MIRROR ANILLO RETROVISOR BOCCOLA RETROVISORE
15	7CA	ZC 9 618 795 U **NFP**	?	«POP» - «808»	**RIVET OCRE** NIET RIVET REMACHE RIVETTO
16		ZD 9 468 530 W **NFP**	8	TFB 5 x 20	**VIS** SCHRAUBE SCREW TORNILLO VITE
	9TT	ZD 9 385 500 U	2	TH 9 x 38 - **NFP**	–
	9TT	ZD 9 468 800 Z	2	TFB 5 x 35 10/72 ▶	–
17	9TT	25 259 019 **NFP**	8	HE 5 x 0,80	**ÉCROU** MUTTER NUT TUERCA DADO
	9TT	95 623 753	2	HE 9 x 1,25 - H 7,5 XT	– **PIECES SPÉCIALES** SPEZIALTEILE SPECIAL PARTS PIEZAS ESPECIALES PEZZI SPECIALI
1	7CA	95 570 639	1	ENS «TRIPLEX» 7/82 ▶ 7/83	**PARE-BRISE** WINDSCHUTZSCHEIBE WINDSCREEN PARABRISAS PARABREZZA
2	7CA	95 570 107	1	«TRIPLEX» 7/82 ▶ 7/83	**GLACE** GLASSCHEIBE GLASS CRISTAL CRISTALLO
3	7CA	*5 415 142*	2	(USA) - NFP ▶ 1/72	**RÉTROVISEUR** RUECKBLICKSPIEGEL REAR VIEW MIRROR RETROVISOR RETROVISORE

P06

ICI FIN DU GROUPE
HIER IST DAS ENDE DER GRUPPE
HERE IS THE END OF GROUPE
AQUI ES EL FIN DEL GRUPO
QUI E LA FINE DEL GRUPPO

7

GROUPE
GRUPPE
GROUPE
GRUPO
GRUPPO

8

VOIR VUE
SIEHE BILD
SEE PICTURE
VER VISTA
VEDERE VEDUTA

Q01

TABLEAU DES VUES 09/91
AUFSTELLUNG DER BILDER
TABLE OF PICTURE
TABLA DE VISTAS
TABELLA DELLE VEDUTE

GROUPE
GROUP
GROUP 8
GRUPO
GRUPPO

SOUS-GROUPE UNTERGRUPPE SUBGROUP SUBGRUPO SOTTOGRUPPO	NUMÉRO NUMMER NUMBER NUMERO NUMERO	VUE BILD PICTURE VISTA VEDUTA
PARE-SOLEIL - RETROVISEUR INT. SONNENBLENDE - RUECKBLICKSP. SUN VISOR -REAR VIEW MIRROR. PARASOL - RETROVISO. INTERIOR PARASOLE - RETROVISORE INTERNO –	8-554-10	Q03
CEINTURES DE SECURITE SICHERHEITSGURTE SAFETY BELTS CINTURONES DE SEGURIDAD CINTURE SICUREZZA 7/77 ▶	8-616-10	Q04
SUPPORT DE ROUE DE SECOURS HALTER F. ERSATZRAD SPARE WHEEL BRACKET SOPORTE RUEDA REPUESTO SUPP. RUOTA SCORTA 4 x 4	8-622-10	Q05 Q06
OUTILLAGE [illegible]	8-622-20	Q07
BANQUETTE ARRIERE SITZBANK HINTEN REAR SEAT REAR BANQUETA ATRAS SEDILE POSTERIORE	8-922-10	Q08
SIEGES AVANT VORDERE SITZE FRONT SEATS ASIENTOS DELANTEROS SEDILI POSTERIORI	8-932-10	Q09 Q10 Q11
SIEGES AVANT DROIT VORDERSITZ, RECHTS FRONT SEAT, RHS ASIENTO DELANT. IZQUIERDO SEDILE ANT. DESTRO – 4 x 4	8-932-20	Q11

CAPOTE COTON BOUTON PRESSION BAUMWOLLENVERDECK MIT DRUCKKNOEPFEN COTTON CANVAS WITH PRESS-BUTTONS CAPOTA DE ALGODON CON BOTONES PRESION CAPOTE DI COTONE A BOTTONI - PRESSIONE – ▶ 4/71	8-971-10	Q12
CAPOTE PLASTIQUE RAYE - BOUTON PRESSION PLASTIK-VERDECK (GESTREIFT) MIT DRUCKKNOEPFEN STRIATED PLASTIC CANVAS WITH PRESS-BOTTONS CAPOTA DE PLASTICO RAYADO CON BOTONES-PRESION CAPOTE DI PLASTICA STRIATA A BOTTONI-PRESSIONE – ▶ 4/71	8-971-11	Q13
CAPOTE COTON - PATTE RAYEE TOURNIQUET BAUMWOLLENVERDECK MIT GESTREIFTEN SPANNLASCHEN COTTON CANVAS WITH STRIATED LUGS AND TURN-BOTTONS CAPOTA DE ALGODON CON PATAS RAYADAS Y BOTONES TORNIQUET CAPOTE DI COTONE A STAFFE STRIATE E BOTTONI GIRANTI – ▶ 4/71	8-971-20	Q14
CAPOTE COTON PATTE LISSE TOURNIQUET BAUMWOLLENVERDECK MIT GLATTEN SPANNLASCHEN COTTON CANVAS WITH SMOOTH LUGS AND TURN-BOTTONS CAPOTA DE ALGODON CON PATAS LISAS Y BOTONES TORNIQUETES CAPOTE DI COTONE A STAFFE LISCIE E BOTTONI GIRANTI – ▶ 4/71	8-971-21	Q15
CAPOTE PLASTIQUE RAYÉ TOURNIQUET PLASTIK-VERDECK (GESTREIFT) MIT DREHKNOEPFEN PLASTIC CANVAS (STRIATED) WITH TURN-BOTTONS CAPOTA DE PLASTICO RAYADO CON BOTONES TORNIQUETES CAPOTE DI PLASTICA STRIATA A BOTTONI GIRANTI – ▶ 4/71	8-971-22	R15

CAPOTE PLASTIQUE LISSE TOURNIQUET PLASTIK-VERDECK (GLATT) MIT DREHKNOEPFEN PLASTIC CANVAS (SMOOTH) WITH TURN-BOTTONS CAPOTA DE PLASTICO LISO CON BOTONES-TORNIQUETES CAPOTE DI PLASTICA LISCIA A BOTTONI GIRANTI – ▶ 4/71	8-971-23	R14
CAPOTAGE VERDECK CANVAS CAPOTA CAPOTE – 4/71 ▶	8-971-30	R13 R12
CAPOTE - HOUSSE DE ROUE DE SECOURS VERDECK-UEBERDECKUNG F. ERSATZRAD CANVAS - SPARE WHEEL COVER CAPOTA - FUNDA DE RUEDA DE REPUESTO CAPOTE - COPERTINA RUOTA SCORTA – «AZUR»	8-971-40	R11
ARMATURE DE CAPOT VERDECKARMATUR CANVAS SUPPORT FRAME ARMADURA DE CAPOTA ARMATURA PER CAPOTE – 1° ▶ 4/71 – 2° ▶ 4/71 4/71 ▶ – 4 x 4 – «AZUR»	8-971-50 8-971-50A 8-971-50B 8-971-51 8-971-52	R10 R09 R08 R07 R06 R05
TAPIS BODENMATTEN CARPETS ALFOMBRAS TAPPETI –	8-981-10	R04

137
8-554-10
Q-03

PARE-SOLEIL – RÉTROVISEUR INTÉRIEUR
SONNENBLENDE – RUECKBLICKSPIEGEL, INNEN
SUN VISOR – REAR VIEW MIRROR, INNER
PARASOL – RETROVISOR INTERIOR
PARASOLE – RETROVISORE INTERNO

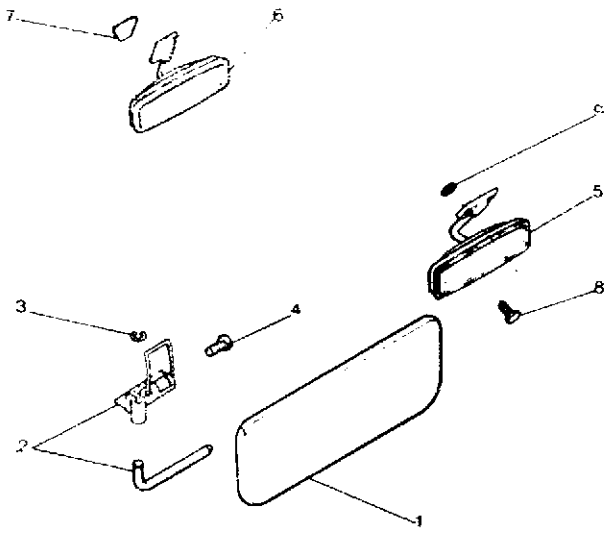

135 8-554-10

I	NUMEROS		K		DESIGNATIONS
1	8AA	AZ 554 1 A	1		**ÉCRAN SANS MIROIR** BLENDSCHIRM OHNE SPIEGEL SCREEN WITHOUT MIRROR PANTALLA SIN ESPEJO SCHERMO SENZA SPECCHIETTO
2	8AY	AY 554 06 A	1		**SUPPORT AVEC AXE** TRAEGER MIT ACHSE BRACKET WITH ROD SOPORTE CON EJE SUPPORTO CON PERNO
3	8AA	ZA 110 878 76	1		**JONC D'ARRET D'AXE** SICHERUNGSRING F. ACHSE ROD CIRCLIP ANILLO RETENCION DE EJE ARRESTO ELASTICO PER PERNO
4		*H 426 94*	1	TH 5 x 8 - NFP	**VIS D'AXE** SCHRAUBE F. ACHSE ROD SCREW TORNILLO DE EJE VITE PER PERNO
5	8AA	5 402 275 NFP	1	12/70 ▶	**RÉTROVISEUR** RUECKBLICKSPIEGEL REAR VIEW MIRROR RETROVISOR RETROVISORE
6	8AM	5 426 606 RP 95 656 409	1	▶ 12/70 RMP DEO 1 - 75 407 440	–
7	8SM	75 407 440	1		**CACHE SUPPORT** ABDECKUNG F. TRAEGER BRACKET BLANKING OCULTADOR DE SUPPORTO COPRISUPPORTO
8	9TT	79 03 016 284	2	TR 4,85 x 16 12/70 ▶	**VIS** SCHRAUBE SCREW TORNILLO VITE
9	9TT	79 03 056 005	2	CR ϕ 5,2 x 9,4	– **RONDELLE** SCHEIBE WASHER ARANDELA RONDELLA

137

8-616-10

Q-04 ↑

CEINTURES DE SÉCURITÉ
SICHERHEITSGURTE
SAFETY BELTS
CINTURONES DE SECURIDAD
CINTURE DI SICUREZZA

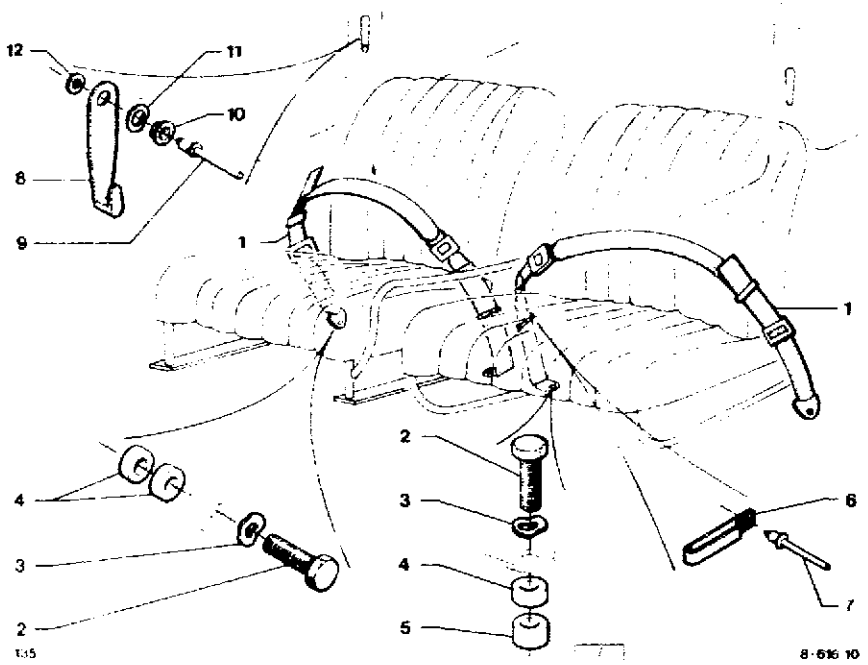

I	NUMEROS		K	7/77 ►	DESIGNATIONS
1	8CA	75 511 103	2	NFP ► 11/79	**CEINTURE AVEC FIXATION** GURT M. BEFESTIGUNGSTEILEN BELT WITH SECURING PARTS CINTURON CON SUJECION CINTURA CON FISSAGGIO
	=				
	8CA	95 496 625	1	AVD - AV G 6/82 ►	**CEINTURE NUE** GURT OHNE AUSRUESTUNG BELT ONLY CINTURON DESNUDO CINTURA NUDA

2	8MA	75 449 950	4	TH 7 x 16	**VIS** SCHRAUBE SCREW TORNILLO VITE
3	8CA	75 521 606	4	ϕ 9 x 11,6	**RONDELLE** SCHEIBE WASHER ARANDELA RONDELLA
4	8MA	75 416 367	6	ϕ 20,5 x11,3 x 6	**ENTRETOISE** ABSTANDSSTUECK SPACER SEPARADOR DISTANZIALE
5	8GX	75 407 590	2		–
6	8AZ	5 443 999	2		**BRIDE** BEFESTIGUNGSLASCHE CLAMP BRIDA STAFFA
7	7CA	26 187 959	2		**RIVET** NIET RIVET REMACHE RIVETTO

MONTAGE OPTION CAPOTE
ANBAU MIT ROLLVERDECK, WAHLWEISE
EQUIPMENT WITH HOOD OPTION
MONTAJE OPCION CAPOTA
MONTAGGIO OPZIONE CAPOTE

8	8CA	75 511 203	2	► 11/79	**CROCHET RANGEMENT** HAKEN ZUM ABLEGEN HOOK F. BELT RESTING GANCHO DE DESCANCE GANCIO DI RIPOSO
	8MA	5 467 824	2	11/79 ► 7/82	–
	8AZ	95 563 271	2	7/82 ►	–
9	8AY	79 03 072 150	2	«POP»	**RIVET** NIET RIVET REMACHE RIVETTO
10	8AY	26 131 719	2	► 11/79	**BOUTON PRESSION** DRUCKKNOPF PRESS-BUTTON BOTON PRESION BOTTONE PRESSIONE
11	1GX	ZC 9 624 030 U NFP	2	► 11/79	**RONDELLE** SCHEIBE WASHER ARANDELA RONDELLA
	8AA	5 469 170	2	11/79 ►	–
12	9AA	22 768 019 NFP	2		–

137

8-622-10

Q-05

SUPPORT DE ROUE DE SECOURS
HALTERUNG F. ERSATZRAD
SPARE WHEEL BRACKET
SOPORTE DE RUEDA DE REPUESTO
SUPPORTO RUOTA SCORTA

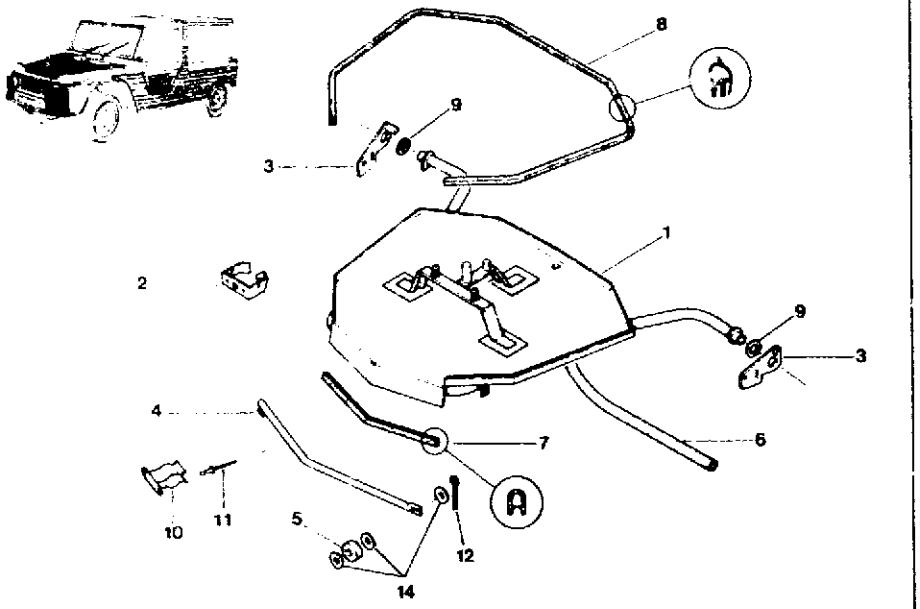

135

8-622-10

1	NUMEROS		K	4 x 4	DESIGNATIONS
1	8CA	95 565 995 NFP	1	1/81▶	**SUPPORT DE ROUE** HALTERUNG F. ERSATZRAD SPARE WHEEL BRACKET SOPORTE DE RUEDA SUPPORTO PER RUOTA
2	8CA	95 545 828	1		**SUPPORT CALE ROUE** ANSCHLAGHALTER STOP BRACKET SOPORTE DE BLOQUEO SUPPORTO PER BLOCCAGGIO
3	8CA	95 538 521	2	▶1/81	**ARTICULATION DE SUPPORT** HALTERGELENK BRACKET HINGE ARTICOLACION DE SOPORTE ARTICOLAZIONE SUPPORTO
	8CA	95 565 992 - NFP	1	G 1/81 ▶	–
	8CA	95 565 993	1	D 1/81 ▶	–
4	8CA	95 542 378	1		**BÉQUILLE** STUETZE STAY PUNTA PUNTELLO
5	8CA	95 542 381	1	15 x ϕ 5 - E 10	**BUTÉE DE BÉQUILLE** STUTZENANSCHLAG STAY STOP TOPE DE PUNTAL REGGISPINTA PUNTELLO
6	8CA	95 538 522	1		**TUBE ÉVACUATION EAU** WASSERABLAUFROHR WATER DRAIN PIPE TUBO EVACUACION AGUA TUBO SCOLO ACQUA
7	8CA	95 545 162	1	LON 515	**JOINT** DICHTUNG SEALING JUNTA GUARNIZIONE
8	8CA	95 545 160	1	LON 1950	–
9	8CA	95 546 084	2		**ENTRETOISE** ABSTANDSSTUECK SPACER SEPARADOR DISTANZIALE
10	6AY	5 413 580	1		**AGRAFE** KLAMMER CLIP GRAPA GRAFFETTA
11	7CA	ZC 9 618 792 U	1	«POP» ϕ 3,2 - L 10,3	**RIVET** NIET RIVET REMACHE RIVETTO
12	6BF	ZF 10 734 201 L NFP	1	ϕ 2 - LON 15	**GOUPILLE** PASSSTIFT PIN GRUPILLA COPIGLIA
13	9TT	*23 720 319*	4	TH ϕ 7 x 25 - NFP	**VIS** SCHRAUBE SCREW TORNILLO VITE
14	2CA	79 03 053 025	3	ϕ 5 x 10	**RONDELLE** SCHEIBE WASHER ARANDELA RONDELLA
15	9AA	79 03 058 029	4	ϕ 7 x 18	–

137

8-622-10

Q-06

SUPPORT DE ROUE DE SECOURS (Suite)
HALTERUNG F. ERSATZRAD (Forts.)
SPARE WHEEL BRACKET (Cont.)
SOPORTE DE RUEDA DE REPUESTO (Cont.)
SUPPORTO RUOTA SCORTA (Cont.)

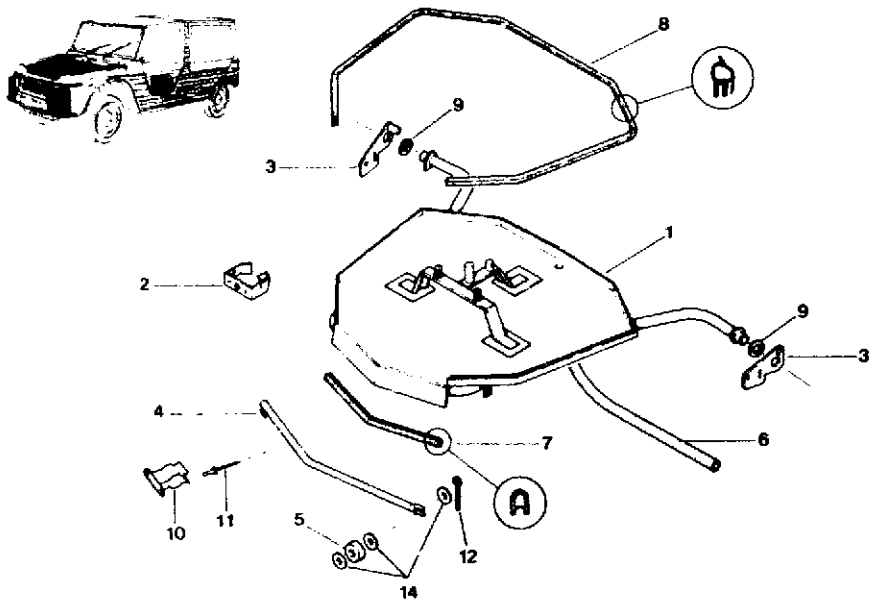

135

8-622-10

I	NUMEROS		K	4 x 4	DESIGNATIONS
16	1VD	79 03 034 071	4	⌀ 7	**ECROU** MUTTER NUT TUERCA DADO

OUTILLAGE
WERKZEUGE
TOOLS
UTILLAGE
ATTREZZI

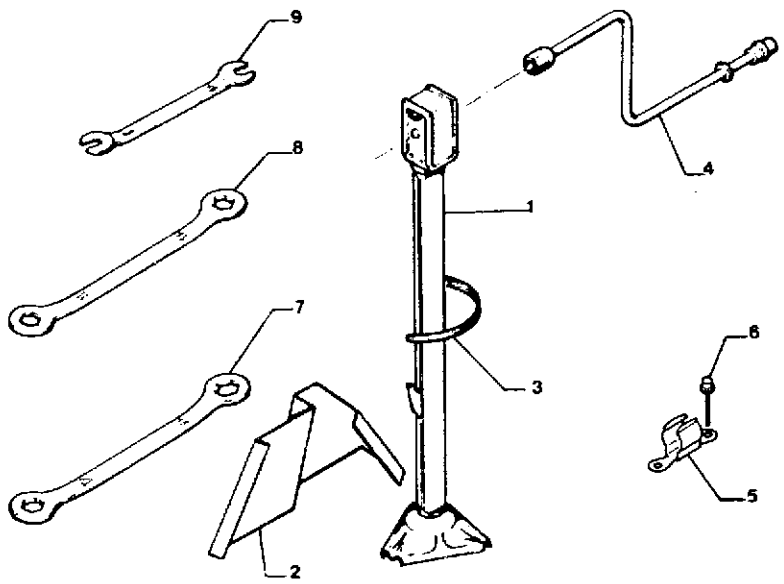

135 8-622-20

I	NUMEROS		K		DESIGNATIONS
1		*AY 623 0 C* RP 95 494 615	1	▶ 4/71	**CRIC** WAGENHEBER JACK GATO CRICCO
	8CA	5 402 963	1	4/71 ▶	–
	7AM	AM 623 100 **NFP**	1		**SUPPORT DE CRIC** HALTERUNG F. WAGENHEBER JACK SUPPORT BRACKET SOPORTE DE GATO SUPPORTO PER CRICCO
3	8CA	AY 623 260 A	1		**SANGLE DE CRIC** SPANNBAND F. WAGENHEBER JACK HOLDING STRAP CINTURON DE GATO CINGHIA PER CRICCO
4	8AA	A 251 1 A	1		**MANIVELLE** HANDKURBEL BRACE MANIVELA MANOVELLA
	8CA	95 548 924	1	4 x 4	–
5	8AY	5 413 580	2		**SUPPORT DE MANIVELLE** HALTERUNG F. WAGENHEBER BRACE SUPPORT BRACKET SOPORTE DE MANIVELA SUPPORTO PER MANOVELLA
6	7AV	79 03 073 083 **NFP**	4		**RIVET DE SUPPORT** NIET RIVET REMACHE RIVETTO
7	8TT	*ZC 9 621 951 U*	1	12 x 14 - NFP	**CLÉ A OEIL** RINGSCHLUESSEL RING SPANNER LLAVE DE ESTRELLA CHIAVE POLIGONALE
8	8TT	*26 219 589*	1	11 x 13 - NFP	–
9	8TT	*ZC 9 650 147 U*	1	8 x 10 - NFP	**CLÉ PLATE** FLACHER SCHLUESSEL FLAT SPANNER LLAVE LLANA CHIAVE PIATTA

137

8-922-10

Q-08 ↑

BANQUETTE ARRIERE
SITZBANK (HINTEN)
BENCH SEAT (REAR)
BANQUETA (ATRAS)
SEDILE (POSTERIORE)

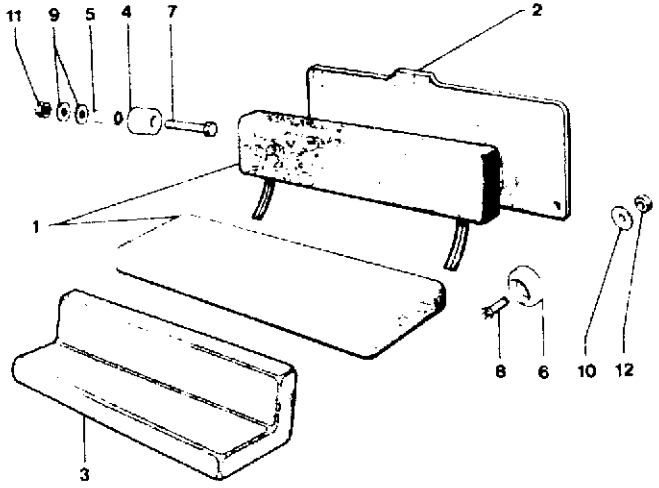

135 8-922-10

I	NUMEROS		K		DESIGNATIONS
					BANQUETTE ARRIERE BEZOGENE SITZBANK TRIMMED BENCH SEAT BANQUETA GUARNECIDA SEDILE RIVESTITO
1	8CA	5 404 865	1		**– SANS PANNEAU ARRIERE** – OHNE HINTERE FUELLUNG – WITHOUT REAR PANEL – SIN PANEL TRASERO – SENZA PANNELLO POST.
2	8CA	5 476 386 * 201 **NFP**	1	AR - RMP ▶ 6/75	**PANNEAU DE DOSSIER** FUELLUNG F. RUECKENLEHNE BACK PANEL PANEL DE RESPALDO PANNELLO PER SCHIENALE
	8CA	5 477 342 * 405	1	AR - «405» - TT RMP	–
	8CA	5 476 386 * 808	1	AR - RMP ▶ 7/77	–
	8CA	5 476 386 * 824	1	AR 7/77 ▶	–
	8CA	5 476 386 *508	1	AR - RMP	–
	8CA	5 476 386 * 400	1	6/75 ▶	–
	8CA	5 476 386 * 524	1	AR 7/79 ▶	–
	8CA	5 476 386 * 811	1	«AZUR»	–
3	8CA	95 591 584 WY	1	AR - «AZUR»	**HOUSSE** SCHONBEZUG LOOSE COVER FUNDA COPERTINA
4	5AM	5 412 804 **NFP**	2	CC	**BAGUE** HUELSE BUSH CASQUILLO BOCCOLA
5	6AM	AM 615 99 A	2		**ENTRETOISE** ABSTANDSSTUECK SPACER SEPARADOR DISTANZIALE
6	7CA	ZC 9 292 281 U	2	CC	**TAMPON** PUFFER BUFFER TOPE TAMPONE
7	9TT	*23 725 319* RP 79 03 101 776	2	TH 7 x 50	**VIS** SCHRAUBE SCREW TORNILLO VITE
8	9MA	24 677 069	2	TF 4 x 25	–
9	9AA	79 03 053 374 **NFP**	4	7,5 x 20 x 2	**RONDELLE** SCHEIBE WASHER ARANDELA RONDELLA
10	9BF	79 03 058 026	2	4,1 x 10,2 x 1,25	–
11	1VD	77 03 034 009 **NFP**	2	HEF 7 x 1,00	**ÉCROU** MUTTER NUT TUERCA DADO
12	9AS	79 03 032 003	2	HE 4 x 0,70 ARMÉE 6/71 ▶	–
					PIECES SPÉCIALES
1	8CA	5 404 865	1		**BANQUETTE SANS PANNEAU AR**
2	8CA	5 477 342 * 405	1		**PANNEAU DE DOSSIER**

SIEGES AVANT
VORDERE SITZE
FRONT SEATS
ASIENTOS DELANTEROS
SEDILI ANTERIORI

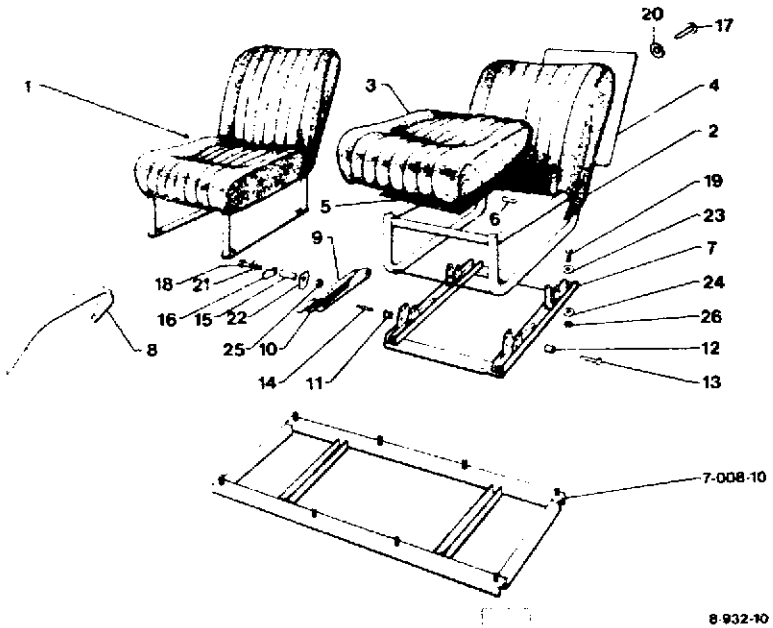

I	NUMEROS		K		DESIGNATIONS
1	8AY	AY 912 011 B	1	G - TT 2/70 ▶ 2/74 1o - G 2/74 ▶	**SIEGE COMPLET** KOMPLETTER SITZ COMPLETE SEAT ASIENTO COMPLETO SEDILE POSTERIORE
			1	D 2/70 ▶ 9/70 RMP	
	8CA	75 518 333	1	D - 11/84 ▶ RMP *5 403 342*	**– AVEC POIGNÉE** – MIT GRIFF – WITH HANDLE – CON MANECILLA – CON MANIGLIA
2	8CA	*5 454 462* RP AY 912 011 B	1	2o - G 2/74 ▶	**– THERMOFORME** – WARMGEFORMT – THERMO-FORMED – TERMO-FORMADO – PRESSO FUSO
	8CA	*5 403 342* RP 75 518 333	1	2o - D 2/74 ▶	–
					DOSSIER RUECKENLEHNE SQUAB RESPALDO SCHIENALE
	8AY	AY 912 210 A	2	TT ▶ 2/74 1o 2/74 ▶	**– MATELASSURE** – POLSTERUNG – PADDING – RELLENO – IMBOTTITURA
	8AY	AY 912 236 A	2	TT ▶ 2/74 1o 2/74 ▶	**– GARNITURE** – BEZUG – TRIMMING – GUARNECIDO – RIVESTIMENTO
	8CA	95 591 581 WY	2	«AZUR»	**– HOUSSE** – SCHONBEZUG – LOOSE COVER – FUNDA – COPERTINA
3					**COUSSIN** SITZKISSEN CUSHION COJIN CUSCINO
	8AY	AY 912 211 A	2	TT ▶ 2/74 1o 2/74 ▶	**– MATELASSURE** – POLSTERUNG – PADDING – RELLENO – IMBOTTITURA
	8AY	AY 912 237 A	2	TT ▶ 2/74 1o 2/74 ▶	**– GARNITURE** – BEZUG – TRIMMING – GUARNECIDO – RIVESTIMENTO
	8CA	95 591 582 WY	2	«AZUR»	**– HOUSSE** – SCHONBEZUG – LOOSE COVER – FUNDA – COPERTINA
4	8AY	*AY 912 332 A*	2	«201» - NFP ▶ 5/77	**PANNEAU DE DOSSIER** FUELLUNG F. RUECKENLEHNE BACK SQUAB PANEL PANEL DE RESPALDO PANNELLO PER SCHIENALE
	8AY	*AY 912 333 A*	2	«405» - NFP ▶ 5/77	–
	8AY	*AY 912 334 A*	2	«808» - NFP ▶ 5/77	–
	8AY	*AY 912 335 A*	2	«508» - NFP ▶ 5/77	–
	8CA	5 485 704 * 706	2	5/77 ▶	–
5	8AY	AY 912 282 A	2		**GRILLAGE** GITTER NETTING REJILLA GRATICOLA

SIEGES AVANT (Suite)
VORDERE SITZE (Forts.)
FRONT SEATS (Cont.)
ASIENTOS DELANTEROS (Cont.)
SEDILI ANTERIORI (Cont.)

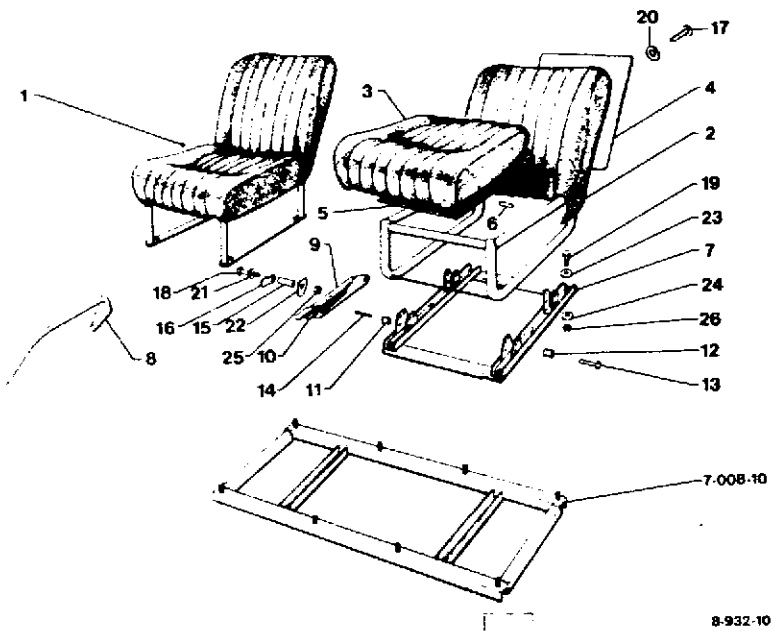

135

I	NUMEROS		K			DESIGNATIONS
6	8AY	AY 912 285 A	28	LON 45		**CROCHET** HAKEN HOOK GANCHO GANCIO
	8AY	AY 912 286 A	4	LON 30		–
7	8HA	H 912 81	1	G	▶ 2/70	**SOUBASSEMENT** RAHMEN FRAME CUADRO TELAIO
	8AY	AY 912 256 A	1	D	▶ 2/70	–
			2		2/70 ▶	–

8	8CA	5 403 343	1	D - NFP	3/70 ▶	**POIGNÉE** GRIFF HANDLE MANECILLA MANIGLIA
9	8HA	ZC 9 802 487 U	1	NFP		–
10	8HA	ZC 9 802 483 U	1	NFP		**RESSORT** FEDER SPRING MUELLE MOLLA
11	7CA	ZC 9 224 415 U	4	INF		**GALET** ROLLE ROLLER RODAJA ROTELLA
12	7CA	ZC 9 233 163 U	2	SUP - CC		–
13	7AA	5 437 263	2	ϕ 6 - LON 32		**AXE** ACHSE PIN EJE PERNO
14	7HA	ZC 9 612 001 U	4	ϕ 6 - LON 36		–
15	7CA	ZC 9 298 748 U	4	ϕ 9 - LON 28		**ENTRETOISE** ABSTANDSHUELSE SPACER SEPARADOR DISTANZIALE
16	7CA	96 995 676 NFP	2			**ARRETOIR** SICHERUNGSBLECH LOCKPLATE RETEN ARRESTO
17	7RB	79 03 016 181	12	TR 3,5 x 19		**VIS** SCHRAUBE SCREW TORNILLO VITE
18	9TT	23 695 009 - NFP	6	TH 6 x 50		–
19	9BF	23 746 509	8	TH 7 x 38		–
20	9BF	79 03 057 065	12	ϕ 3,5		**RONDELLE** SCHEIBE WASHER ARANDELA RONDELLA
21	9TT	22 363 019	3	ϕ 6,25 x 14		–
22	8CA	ZC 9 232 888 U	2	MEP ϕ 40 - NFP		–
23	9AA	22 762 009 - NFP	8	7,5 x 20 x 2		–
24	9AA	79 03 058 029	8	CO ϕ 7,2 x 18,2		–
25	2VD	25 260 019	6	HE 6 x 1,00		**ÉCROU** MUTTER NUT TUERCA DADO
26	9TT	25 241 009 NFP	8	HE 7 x 1,00 ARMÉE		–
						PIECES SPÉCIALES
1	8CA	5 419 014	1	1o - D		**SIEGE COMPLET (BASCULANT)**
	8CA	5 419 014	1	2o - D	2/74 ▶	**SIEGE THERMOFORME**

137

8-932-20

Q-11

SIEGE AVANT DROIT
VORDERSITZ, RECHTS
FRONT SEAT, RHS
ASIENTO DELANT. IZQUIERDO
SEDILE ANT. DESTRO

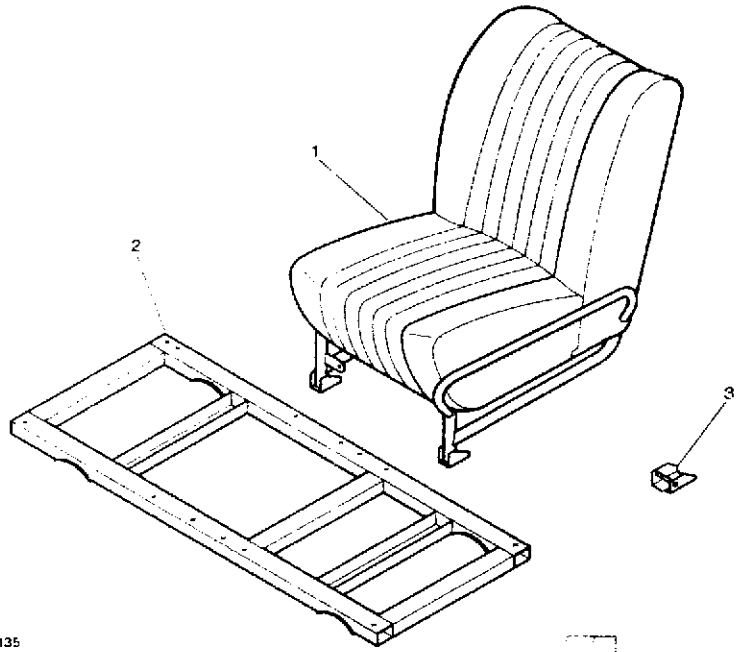

135

8-932-20

I	NUMEROS		K	4 x 4	DESIGNATIONS
1	8CA	95 542 061	1		**SIEGE COMPLET** KOMPLETTER SITZ COMPLETE SEAT ASIENTO COMPLETO SEDILE COMPLETO
2	8CA	95 568 843 **NFP**	1		**SUPPORT** TRAGRAHMEN SUPPORT FRAME SOPORTE SUPPORTO
3	8CA	95 540 236	1		**PONTET DE SIEGE** SITZSTEG SEAT BRIDGE PONTECILLA DEL ASIENTO PONTICELLO SEDILE
4	9CA	22 578 019	3		**GOUPILLE** PASSSTIFT PIN GRUPILLA COPIGLIA
	8CA	95 540 235	1		**ENTRETOISE D'ARTICULATION** ABSTANDSSTUECK HINGE DISTANCE PIECE SEPARADOR DE ARTICULACION DISTANZIALE ARTICOLAZIONE
	6CA	*95 552 829*	1	80 x 40 x 1,5 - NFP	**PLAQUE RENFORT** VERSTAERKUNGSPLATTE REINFORCEMENT PLATE PLACA REFUERZO PLACCA RINFORZO
	8CA	95 542 646	1		**RESSORT** FEDER SPRING MUELLE MOLLA

137

8-971-10

Q-12

CAPOTE COTON – BOUTONS PRESSION
BAUMWOLLENVERDECK MIT DRUCKKNOEPFEN
COTTON CANVAS WITH PRESS-BUTTONS
CAPOTA DE ALGODON CON BOTONES-PRESION
CAPOTE DI COTONE A BOTTONI-PRESSIONE

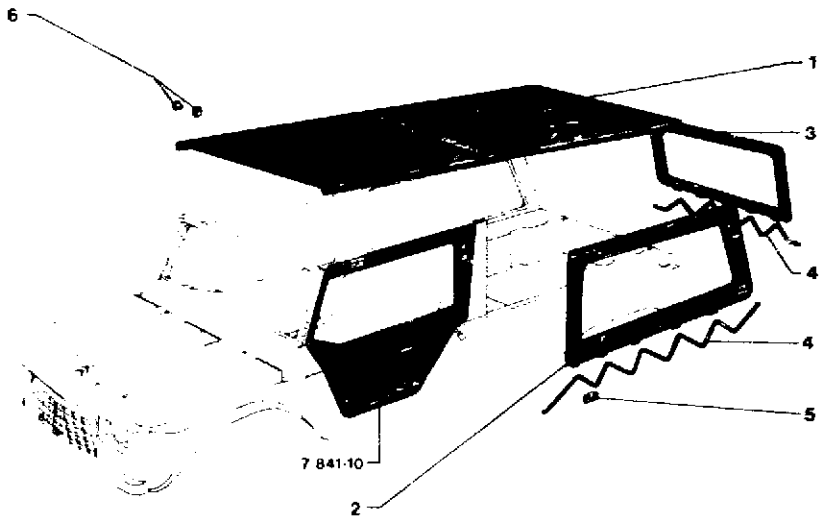

135

8-971-10

I	NUMEROS		K	▶ 4/71	DESIGNATIONS
1	8CA	*AY 971 204 A*	1	SUP- NFP	**CAPOTE** VERDECK CANVAS CAPOTA CAPOTE
2	8CA	*AY 971 243 A*	1	LAT G - NFP	–
3	8CA	*AY 971 244 A*	1	LAT D - NFP	–
4	8CA	*AY 971 245 A*	1	AR - NFP	–
5	8CA	P 972 88 NFP	16		**ATTACHE** SPANNLASCHE FASTENER ENGANCHE STAFFA AGGANCIO
6	8CA	ZC 9 613 170 U	?		**BOUTON PRESSION NOIR** SCHWARZER DRUCKKNOPF BLACK PRESS-BUTTON BOTON DE PRESION NEGRO BOTTONE A PRESSIONE NERO
	8VD	26 131 689	?		**BOUTON PRESSION CHROMÉ** VERCHROMTER DRUCKKNOPF CHROM. PLATED PRESSBUTTON BOTON DE PRESION CROMADO BOTTONE A PRESS. CROMATO
1	8CA	AY 971 291 A	2 1	LAT AR	**TENDEUR** SPANNER STRETCHER TENSOR TENDITORE

137 **CAPOTE PLASTIQUE RAYÉ – BOUTONS PRESSION**
PLASTIK-VERDECK (GESTREIFT) MIT DRUCKKNOEPFEN
8–971–11 PLASTIC CANVAS (STRIATED) WITH PRESS-BUTTONS
CAPOTA DE PLASTICO RAYADO CON BOTONES-PRESION
Q–13 ↑ CAPOTE DI PLASTICA STRIATA A BOTTONI-PRESSIONE

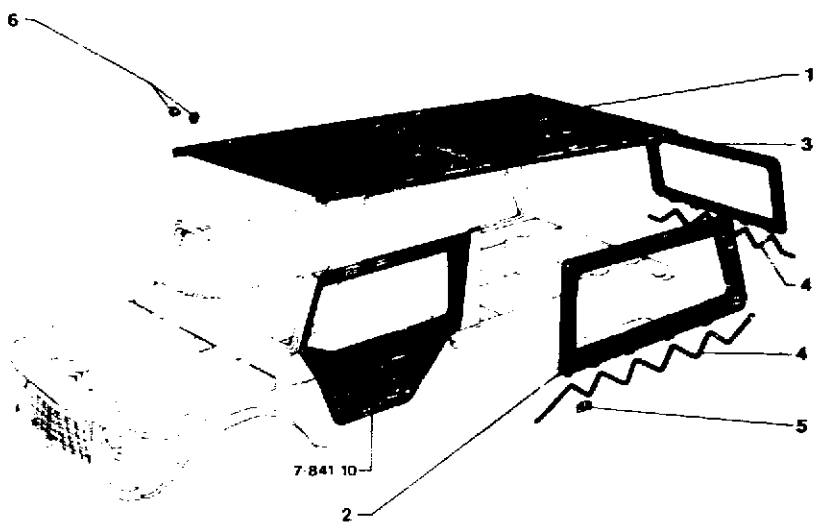

135 8-971-11

I	NUMEROS		K	▶ 4/71	DESIGNATIONS
1	8CA	*AY 971 203 A*	1	SUP - NFP	**CAPOTE** VERDECK CANVAS CAPOTA CAPOTE
2	8CA	*AY 971 240 A*	1	LAT G - NFP	–
	8CA	*AY 971 241 A*	1	LAT D - NFP	–
3	8CA	*AY 971 242 A*	1	AR - NFP	–
4	8CA	AY 971 291 A	2 1	LAT AR	**TENDEUR** SPANNER STRETCHER TENSOR TENDITORE
5	8CA	P 972 88 **NFP**	16		**ATTACHE** SPANNLASCHE FASTENER ENGANCHE STAFFA AGGANCIO
6	8CA	ZC 9 613 170 U	?		**BOUTON PRESSION NOIR** SCHWARZER DRUCKKNOPF BLACK PRESS-BUTTON BOTON DE PRESION NEGRO BOTTONE A PRESSIONE NERO
	8VD	26 131 689	?		**BOUTON PRESSION CHROMÉ** VERCHROMTER DRUCKKNOPF CHROM. PLATED PRESS-BUTTON BOTON DE PRESION CROMADO BOTTONE A PRESS CROMATO

137

8-971-20

Q-14

CAPOTE COTON – PATTE RAYÉE – TOURNIQUET
BAUMWOLLENVERDECK M. GESTREIFTEN SPANNLASCHEN
COTTON CANVAS WITH STRIATED LUGS
CAPOTA DE ALGODON CON PATAS RAYADAS
CAPOTE DI COTONE A STAFFE STRIATE

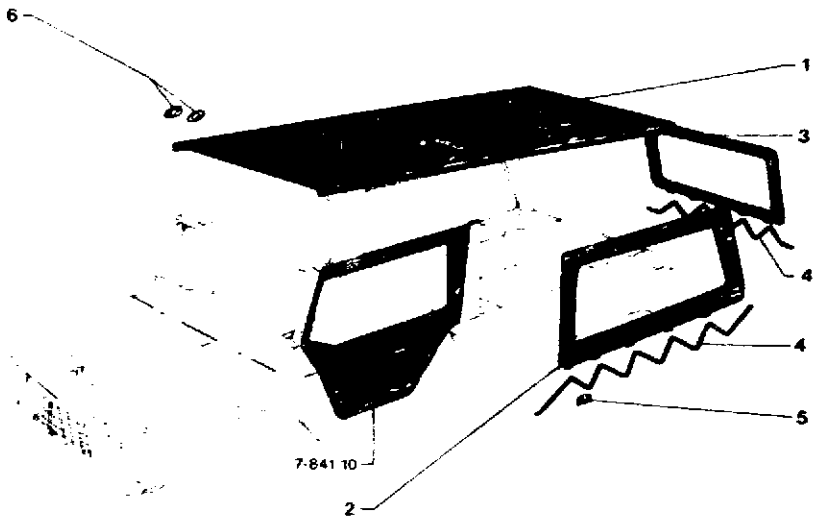

135

8-971 20

I	NUMEROS		K	▶ 4/71	DESIGNATIONS
1	8CA	AY 971 211 A NFP	1	SUP	**CAPOTE** VERDECK (DREHKNOPFBEFEST.) CANVAS (TURN-BUTTON FIXING) CAPOTA (BOTONES TORNIQUETES) CAPOTE (A BOTTONI GIRANTI)
2	8CA	*AY 971 233 A*	1	LAT G - NFP	–
	8CA	*AY 971 235 A*	1	LAT D - NFP	–
3	8CA	*AY 971 237 A*	1	AR - NFP	–
4	8CA	AY 971 281 A	2 1	LAT AR	**TENDEUR** SPANNER STRETCHER TENSOR TENDITORE
5	8CA	P 972 88 NFP	16		**ATTACHE** SPANNLASCHE FASTENER ENGANCHE STAFFA D'AGGANCIO
6	8CA	ZC 9 619 645 U	7		**OEILLET** OESE EYELET OJETE OCCHIELLO

137

8–971–21

Q–15 →

CAPOTE COTON – PATTE LISSE – TOURNIQUET
BAUMWOLLENVERDECK MIT GLATTEN SPANNLASCHEN
COTTON CANVAS WITH SMOOTH LUGS
CAPOTA DE ALGODON CON PATAS LISAS
CAPOTE DI COTTONE A STAFFE LISCIE

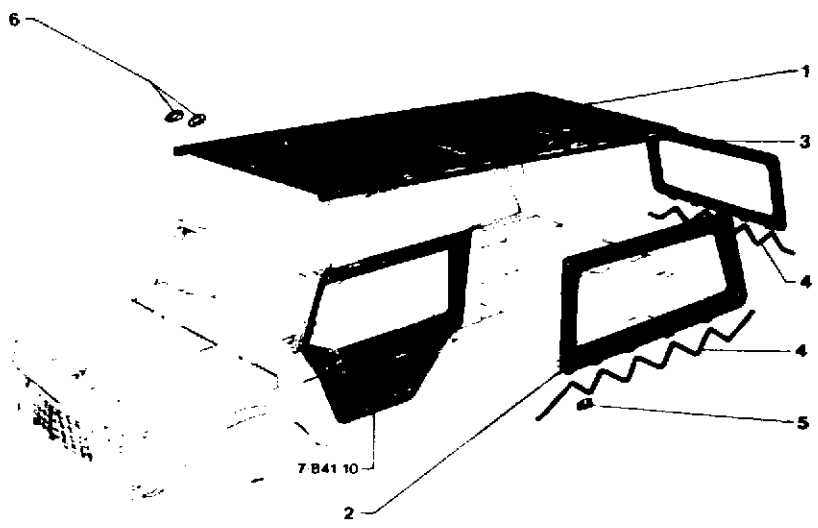

135 8-971-21

I	NUMEROS		K	▶ 4/71	DESIGNATIONS
1	8CA	*AY 971 211 A*	1	SUP- NFP	**CAPOTE** VERDECK (DREHKNOPF-BEFESTIG.) CANVAS (TURN-BOTTON FIXING) CAPOTA (BOTONES TORNIQUETES) CAPOTE (A BOTTONI GIRANTI)
2	8CA	AY 971 213 A NFP	?	LAT G	**CAPOTE AVEC GLACE** SEITL. VERDECK MIT SCHEIBE CANVAS WITH GLASS CAPOTA CON LUNA CAPOTE CON CRISTALLO
	8CA	*AY 971 215 A*	?	LAT D - NFP	–
	8CA	*5 411 539*	?	LAT G - NFP 3/71 ▶	**CAPOTE SANS GLACE** SEITL. VERDECK OHNE SCHEIBE CANVAS WITHOUT GLASS CAPOTA SIN LUNA CAPOTE SENZA CRISTALLO
	8CA	*5 411 540*	?	LAT D- NFP 3/71 ▶	–
3	8CA	*AY 971 217 A*	1	AR - NFP	**CAPOTE** VERDECK CANVAS CAPOTA CAPOTE
4	8CA	AY 971 291 A	2	LAT	**TENDEUR** SPANNER STRETCHER TENSOR TENDITORE
			1	AR	
5	8CA	P 972 88 NFP	16		**ATTACHE** SPANNLASCHE FASTENER ENGANCHE STAFFA D'AGGANCIO
6	8CA	ZC 9 619 645 U	?		**OEILLET** OESE EYELET OJETE OCCHIELLO

137

8-971-22

R-15

CAPOTE PLASTIQUE RAYÉ -- TOURNIQUET
PLASTIK-VERDECK (GESTREIFT) MIT DREHKNOEPFEN
PLASTIC CANVAS (STRIATED) WITH TURN-BOTTONS
CAPOTA DE PLASTICO RAYADO CON BOTONES TORNIQUETES
CAPOTE DI PLASTICA STRIATA A BOTTONI GIRANTI

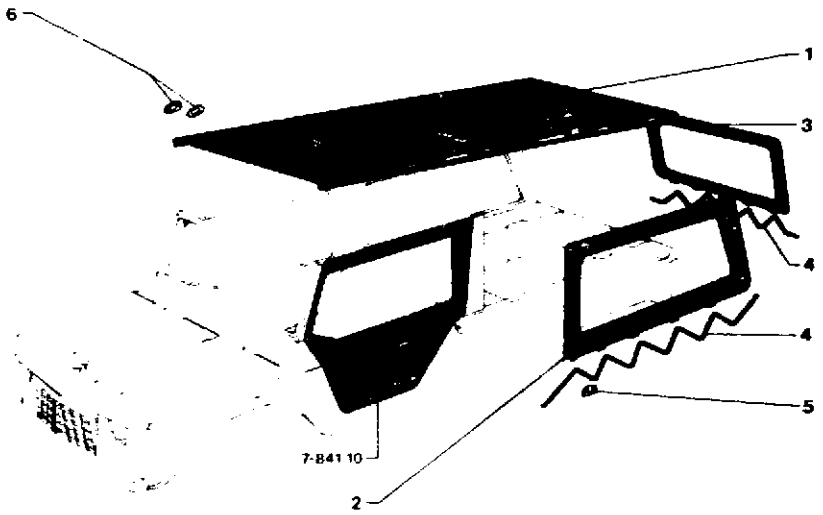

135

8-971-22

1	NUMEROS		K	▶ 4/71	DESIGNATIONS
1	8CA	AY 971 210 A **NFP**	1	SUP	**CAPOTE** VERDECK CANVAS CAPOTA CAPOTE
2	8CA	AY 971 232 A	1	LAT G - **NFP**	—
		AY 971 234 A	1	LAT D - **NFP**	—
3	8CA	AY 971 216 A	1	AR - **NFP**	—
4	8CA	AY 971 291 A	2 1	LAT AR	**TENDEUR** SPANNER STRETCHER TENSOR TENDITORE
5	8CA	P 972 88 **NFP**	16		**ATTACHE** SPANNLASCHE FASTENER ENGANCHE STAFFA D'AGGANCIO
6	8CA	ZC 9 619 645 U	?		**OEILLET** OESE EYELET OJETE OCCHIELLO

137

8-971-23

R-14

CAPOTE PLASTIQUE LISSE – TOURNIQUET
PLASTIK-VERDECK (GLATT) MIT DREHKNOEPFEN
PLASTIC CANVAS (SMOOTH) WITH TURN-BOTTONES
CAPOTA DE PLASTICO LISO CON BOTONES TORNIQUETES
CAPOTE DI PLASTICA LISCIA-BOTTONI GIRANTI

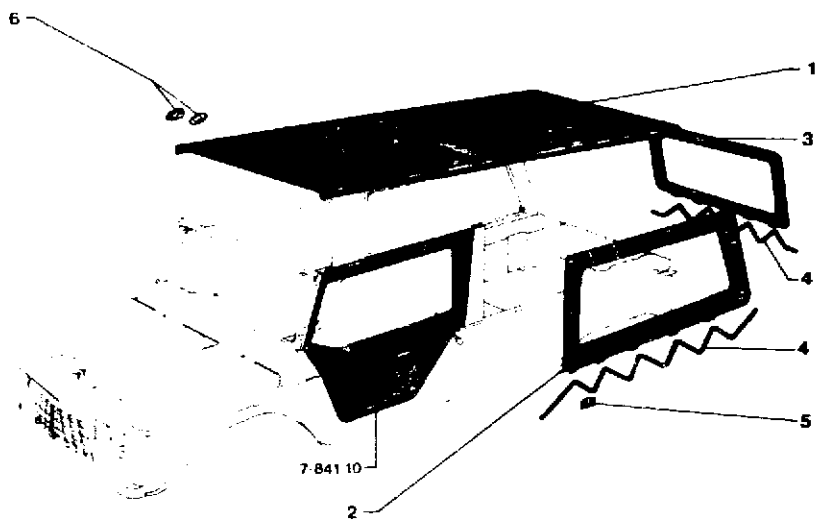

135 8-971-23

I	NUMEROS		K	▶ 4/71	DESIGNATIONS
1	8CA	*AY 971 210 A*	1	SUP - NFP	**CAPOTE** VERDECK CANVAS CAPOTA CAPOTE
2	8CA	*AY 971 212 A*	?	LAT G - NFP	**CAPOTE AVEC GLACE** SEITL. VERDECK MIT SCHEIBE CANVAS WITH GLASS CAPOTA CON LUNA CAPOTE CON CRISTALLO
	8CA	AY 971 214 A	?	LAT D - NFP	–
	8CA	*5 411 533*	?	LAT G. NFP 3/71 ▶	**CAPOTE SANS GLACE** SEIT. VERDECK OHNE SCHEIBE CANVAS WITHOUT GLASS CAPOTA SIN LUNA CAPOTE SENZA CRISTALLO
	8CA	5 411 354 - NFP	?	LAT D 3/71 ▶	–
3	8CA	AY 971 216 A NFP	1	AR	**CAPOTE** HINTERES VERDECK REAR CANVAS CAPOTA TRAS. CAPOTE POST.
4	8CA	AY 971 291 A	2	LAT	**TENDEUR**
			1	AR	SPANNER STRETCHER TENSOR TENDITORE
5	8CA	P 972 88	6		**ATTACHE** SPANNLASCHE FASTENER ENGANCHE STAFFA D'AGGANCIO
6	8CA	ZC 9 619 645 U	?		**OEILLET** OESE EYELET OJETE OCCHIELLO

137

8-971-30

R-13

CAPOTAGE
VERDECK
CANVAS
CAPOTA
CAPOTE

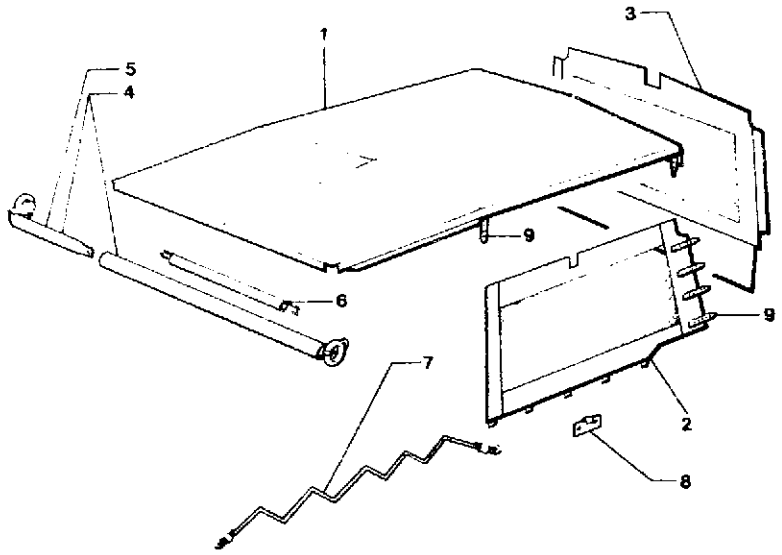

135 8-971-30

I	NUMEROS		K	4/71 ▶	DESIGNATIONS
1					**CAPOTE AVEC ATTACHES** VERDECK MIT HALTESTUECKEN CANVAS WITH FASTENINGS CAPOTA CON SUJETADORES CAPOTE CON ATTACHI
	8CA	5 401 351	1	SUP ▶ 2/73	– **COTON** – BAUMWOLLEN – COTTON – ALGODON – COTONE
	8CA	5 440 858	1	SUP 2/73 ▶ 12/74	–
2	8CA	5 458 437	1	SUP - ARMÉE GENDARMERIE TT - 4 x 2 12/74 ▶ 12/80	– **NYLON** – NYLON – NYLON – NYLON – NAILON
	8CA	95 547 879	1	SUP - 4 x 4 ▶ 6/81	–
			1	SUP - 4 x 2 12/80 ▶ 7/82	–
	8CA	95 574 628	1	SUP - 4 x 4 6/81 ▶ TT 7/82 ▶	–
					CAPOTAGE LATÉRAL SEITLICHES VERDECK LATERAL CANVAS CAPOTA LATERAL CAPOTE LATERALE
	8CA	*5 410 354*	1	G - NFP ▶ 2/73	– **COTON - GLACE 1095 x 525** – BAUMWOL - SCHEIBE 1095 x 525 – COTTON - GLASS 1095 x 525 – ALGODON - LUNA 1095 x 525 – COTON - CRIST. 1095 x 525
	8CA	*5 401 355*	1	D - NFP ▶ 2/73	–
	8CA	5 440 853	1	G 2/73 ▶ 12/74	–
	8CA	5 440 854	1	D 2/73 ▶ 12/74	–
	8CA	5 440 529 NFP	1	G ▶ 2/73	– **COTON - GLACE 525 x 525** – BAUMWOL - SCHEIBE 525 x 525 – COTTON - GLASS 525 x 525 – ALGODON - LUNA 525 x 525 – COTONE - CRIST. 525 x 525
	8CA	*5 404 530*	1	D - NFP ▶ 2/73	–
	8CA	5 440 855	1	G - NFP 2/73 ▶ 12/73	–
	8CA	*5 440 856*	1	D - NFP 2/73 ▶ 12/73	–
	8CA	5 453 424	1	G - NFP 2/73 ▶ 12/74	– **COTON - SANS GLACE** – BAUMWOL - OHNE SCHEIBE – COTTON - WITHOUT GLASS – ALGODON - SIN LUNA – COTONE - SENZA CRISTALLO
	8CA	5 453 425	1	D - NFP 2/73 ▶ 12/74	–
	8CA	5 458 443	1	G - ARMÉE GENDARMERIE TT - 4 x 2 12/74 ▶ 12/80	– **NYLON - GLACE 1095 x 525** – NYLON - SCHEIBE 1095 x 525 – NYLON - GLASS 1095 x 525 – NYLON - LUNA 1095 x 525 – NAILON - CRIST. 1095 x 525
	8CA	5 458 444	1	D - ARMÉE GENDARMERIE TT 4x2 12/74 ▶ 12/80	–
	8CA	95 564 920	1	G - 4 x 2 - 12/80 ▶ 7/82	–
	8CA	95 564 921	1	D - 4 x 2 - 12/80 ▶ 7/82	–
	8CA	95 547 884	1	G - 4 x 4 ▶ 6/81	–
	8CA	95 574 629	1	G - 4 x 4 6/81 ▶ TT 7/82 ▶	–
	8CA	95 547 880	1	D - 4 x 4 ▶ 6/81	–
	8CA	95 574 630	1	D - 4 x 4 6/81 ▶ TT 7/82 ▶	–
	8CA	*5 458 449*	1	G - ARMÉE - NFP	– **NYLON - SANS GLACE**
			1	GENDARMERIE TT 12/74 ▶ 11/77	– NYLON - OHNE SCHEIBE – NYLON - WITHOUT GLASS – NYLON - SIN LUNA – NAILON - SENZA CRISTALLO
	8CA	*5 458 450*	1	D - ARMÉE - NFP	–
			1	GENDARMERIE TT 12/74 ▶ 11/77	

137

8-971-30

R-12 ↓

CAPOTAGE (Suite)
VERDECK (Forts.)
CANVAS (Cont.)
CAPOTA (Cont.)
CAPOTE (Cont.)

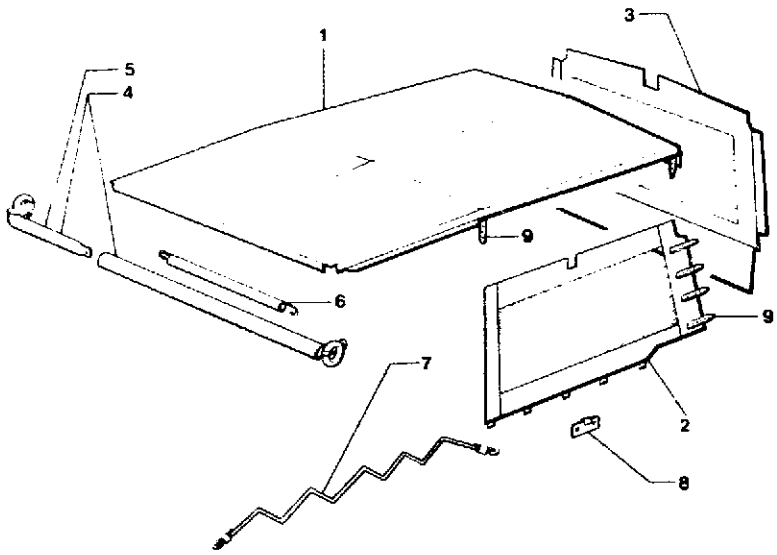

135 8-971-30

I	NUMEROS		K	4/71 ▶	DESIGNATIONS
2					**CAPOTAGE LATÉRAL (Suite)** SEITLICHES VERDECK (Forts.) LATERAL CANVAS (Cont.) CAPOTA LATERAL (Cont.) CAPOTE LATERALE (Cont.)
	8CA	75 514 756 * 700	1	G 11/77 ▶	**– NYLON - GLACE 525 x 525** – NYLON - SCHEIBE 525 x 525 – NYLON - GLASS 525 x 525 – NYLON - LUNA 525 x 525 – NAILON - CRIST. 525 x 525
	8CA	75 514 757 * 700	1	D 11/77 ▶	–
	8CA	95 547 887	1	G - 4 x 4	–
	8CA	95 547 888	1	D - 4 x 4	–
3	8CA	5 401 352	1	AR ▶ 2/73	**CAPOTAGE - COTON** VERDECK - BAUMWOLLEN CANVAS - COTTON CAPOTA - ALGODON CAPOTE - COTONE
	8CA	5 440 857	1	AR 2/73 ▶ 12/74	–
	8CA	5 458 440	1	AR - ARMÉE GENDARMERIE TT 7/74 ▶ 7/82	**CAPOTAGE - NYLON** VERDECK - NYLON CANVAS - NYLON CAPOTA - NYLON CAPOTE - NAILON
	8CA	95 547 883	1	AR - 4 x 4 ▶ 6/81	–
	8CA	95 574 631	1	AR - 4 x 4 6/81 ▶ TT 7/82 ▶	–
4	8CA	5 400 914	1	AV	**TRAVERSE COMPLETE** KOMPLETTE TRAVERSE COMPLETE CROSSMEMBER TRAVIESA COMPLETA TRAVERSA COMPLETA
5	8CA	5 400 909	2		**EMBOUT** ENDSTUECK END-PIECE TERMINAL TERMINALE
6	8CA	5 412 951	1	AV	**TENDEUR** SPANNER STRETCHER TENSOR TENDITORE
7		AY 971 291 A	2	LAT	–
			1	AR	
8	7CA	*5 404 528* RP 95 404 528 DK	?		**ATTACHE** SPANNLASCHE FASTENER ENGANCHE STAFFA D'AGGANCIO
9	8CA	5 413 645	12		**SANGLE NUE** SPANNBAND, OHNE AUSRUEST. STRAP, ONLY CORREA DESNUDA CINGHIA NUDA
	8CA	95 547 870	1	4 x 4 ▶ 6/81	**POCHETTE RANGEMENT CAPOTE**
			1	4 x 2 12/80 ▶	ABLAGETASCHE F. VERDECK POCKET F. CANVAS BOLSILLO DE CUIDADO CAPOTA TASCA PER RIPORRE LA CAPOTE
	8CA	95 573 925 **NFP**	1	4 x 4 6/81 ▶	–

137

8-971-40

R-11

CAPOTAGE – HOUSSE DE ROUE DE SECOURS
VERDECK – UEBERDECKUNG F. ERSATZRAD
CANVAS – SPARE WHEEL COVER
CAPOTA – FUNDA DE RUEDA DE REPUESTO
CAPOTE – COPERTINA RUOTA SCORTA

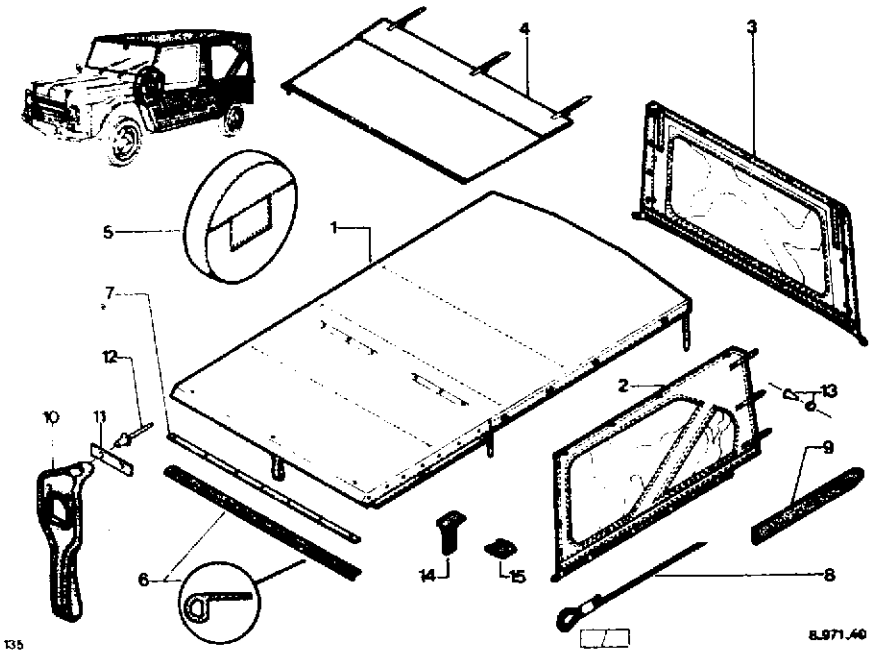

I	NUMEROS		K	«AZUR»	DESIGNATIONS
1	8CA	95 591 567 LT	1	SUP	**CAPOTAGE** VERDECK CANVAS CAPOTA CAPOTE
2	8CA	95 591 569 LT	1	LAT G	–
	8CA	95 591 568 LT	1	LAT D	–
3	8CA	95 591 570 LT	1	AR	–
4	8CA	95 591 571 LT	1		**POCHETTE RANGEMENT CAPOTE** SCHONTASCHE F. VERDECK POCKET F. CANVAS BOLSILLO DE CAPOTA TASCA PER CAPOTE
5	8CA	95 591 574 LT	1		**HOUSSE DE ROUE** UEBERDECKUNG F. ERSATZRAD SPARE WHEEL COVER FUNDA DE RUEDA COPERTINA RUOTA SCORTA
6	8CA	95 596 651	1		**JOINT DE CAPOTE** DICHTUNG F. VERDECK SEAL F. CANVAS JUNTA DE CAPOTA GUARNIZIONE PER CAPOTA
7	8CA	95 596 652	1		**PLAQUE FIX. JOINT** PLATE F. DICHTUNG SEAL PLATE PLACA DE JUNTA PLACCA PER GUARNIZIONE
8	8CA	5 413 643 * 811	3		**TENDEUR DE CAPOTE** STREBE F. VERDECK CANVAS STRECHER TENSOR DE CAPOTA TENDICAPOTE
9	8CA	5 413 645 * 811	?		**SANGLE** SPANNBAND STRAP CINTURON CINGHIA
10	8AY	AY 971 111	1	«PLASTIQUE»	**POIGNÉE** GRIFF HANDLE MANECILLA MANILLA
11	8AY	AY 971 76	1		**PLAQUETTE** PLAKETTE PLAQUETTE PLAQUETA PLACCHETTA
12	6VD	79 03 072 083	9	«POP»	**RIVET** NIET RIVET REMACHE RIVETTO
13	8CA	21 974 059	?		**– TUBULAIRE** – ROEHRFOERMIG – TUBULAR – TUBULAR – TUBULARE
14	8CA	95 605 447	2		**LANGUETTE D'ANCRAGE** ANHAENGELASCHE HOOKING LUG LENGUETA DE ENGANCHE LINGHETTA AGGANCIO
15	8CA	95 605 448	2		**EMBOUT** ENDSTUECK ENDPIECE TERMINAL TERMINALE

137

8-971-50

R-10

ARMATURE DE CAPOTE
VERDECKARMATUR
CANVAS SUPPORT FRAME
ARMADURA DE CAPOTA
ARMATURA PER CAPOTE

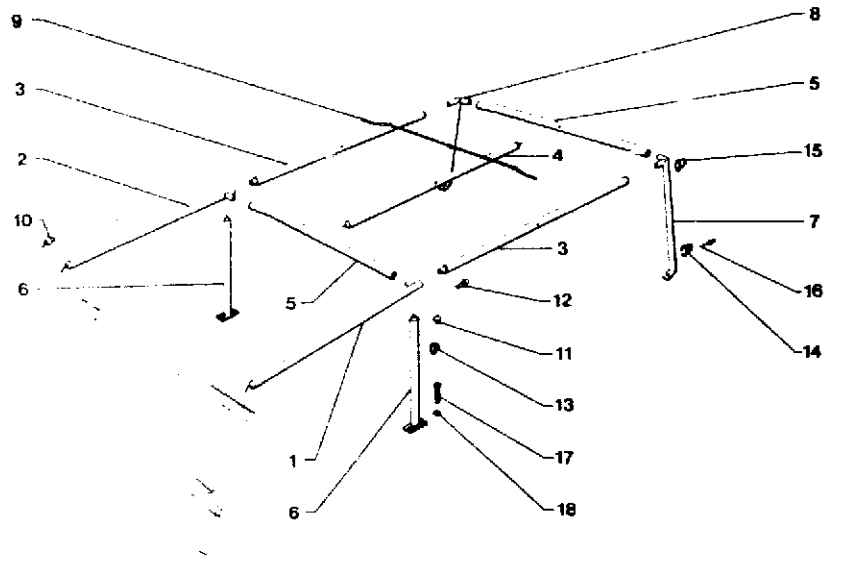

135

8-971-50

I	NUMEROS		K	1o - ▶4/71	DESIGNATIONS
1	8AY	*AY 971 251 A*	1	LAT - AV G - NFP	**TUBE** ROHR PIPE TUBO TUBO
2	8AY	*AY 971 252 A*	1	LAT - AV D - NFP	–
3	8AY	AY 971 255 A	2	LAT - AR G - AR D	–
4	8AY	*AY 971 260 A*	1	CENT - NFP	–
5	8AY	*AY 971 258 A*	2	AV - AR - NFP	**– TRANSVERSAL** – QUERLAUFEND – TRANSVERSAL – TRASVERSAL – TRASVERSALE
6	8AY	*AY 971 253 A*	2	AV - NFP	**PIED** PFOSTEN PILLAR MONTANTE MONTANTE
7	8AY	AY 971 256 A	1	AR G	–
8	8AY	*AY 971 257 A*	1	AR D - NFP	–
9	8AY	*AY 971 259 A*	1	CENT ψ 6 - NFP	**ARCEAU** SPRIEGEL STICK ARCO CENTINA
10	8AY	AY 971 298 A	2	«PLASTIQUE»	**EMBOUT** ENDSTUECK ENDPIECE TERMINAL TERMINALE
11	8AY	AY 971 297 A	4		–
12	8AY	AY 971 268 A **NFP**	?		**BOUTON A VIS** KNOPF MIT SCHRAUBE KNOB WITH SCREW BOTON CON TORNILLO BOTTONE A VITE
13	8AY	ZC 9 613 174 U	8	H 6	**TOURNIQUET** DREHKNOPF TURN-BUTTON BOTON-TORNIQUETE BOTTONE GIRANTE
14	8AY	ZC 9 613 175 U	6	H 8	–
15	8AY	ZC 9 613 176 U	2	H 10	–
16	7AM	AM 825 76 A	?	«POP» ψ 3,2	**RIVET** NIET RIVET REMACHE RIVETTO
	8AY	79 03 072 150	?	«POP» ψ 4	–
17	9TT	23 857 019	6	TH 9 x 35	**VIS** SCHRAUBE SCREW TORNILLO VITE
18	9TT	79 03 058 087	6	CO ψ 9,2 x 20,25	**RONDELLE** SCHEIBE WASHER ARANDELA RONDELLA

137

8-971-50-A

R-09

ARMATURE DE CAPOTE
VERDECKARMATUR
CANVAS SUPPORT FRAME
ARMADURA DE CAPOTA
ARMATURA PER CAPOTE

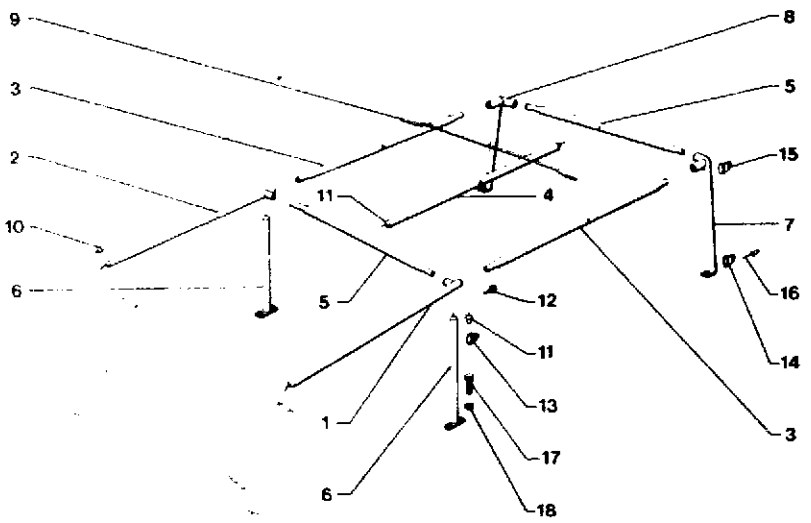

135

8 971-50A

I	NUMEROS		K	2º ▶ 4/71	DESIGNATIONS
1	8CA	AY 971 269 A NFP	1	LAT - AV G	**TUBE** ROHR PIPE TUBO TUBO
2	8CA	*AY 971 270 A*	1	LAT - AV D - NFP	–
3	8CA	AY 971 271 A	2	LAT - AR G - AR D-NFP	–
4	8CA	*AY 971 260 A*	1	CENT - NFP	–
5	8CA	*AY 971 272 A*	2	AV - AR - NFP	– **TRANSVERSAL** – QUERLAUFEND – TRANSVERSAL – TRASVERSAL – TRASVERSALE
6	8CA	*AY 971 253 A*	2	AV - NFP	**PIED** PFOSTEN PILLAR MONTANTE MONTANTE
7	8CA	AY 971 218 A	1	AR G - NFP	–
8	8CA	*AY 971 219 A*	1	AR D - NFP	–
9	8CA	*AY 971 259 A*	1	CENT ϕ 6 - NFP	**ARCEAU** SPRIEGEL STICK ARCO CENTINA
10	8CA	AY 971 298 A	2	«PLASTIQUE»	**EMBOUT** ENDSTUECK ENDPIECE TERMINAL TERMINALE
11	8CA	AY 971 297 A	4		–
12	8CA	AY 971 268 A NFP	?		**BOUTON A VIS** KNOPF MIT SCHRAUBE KNOB WITH SCREW BOTON CON TORNILLO BOTTONE A VITE
13	8CA	ZC 9 613 174 U	8	H 6	**TOURNIQUET** DREHKNOPF TURN-BUTTON BOTON-TORNIQUETE BOTTONE GIRANTE
14	8CA	ZC 9 613 175 U	6	H 8	–
15	8CA	ZC 9 613 176 U	2	H 10	–
16	7AM	79 03 072 258	?	«POP» ϕ 3,2	**RIVET** NIET RIVET REMACHE RIVETTO
	8AY	26 167 469 - NFP	?	«POP» ϕ 4	–
17	9TT	23 857 019	6	TH 9 x 35	**VIS** SCHRAUBE SCREW TORNILLO VITE
18	9TT	79 03 058 087	6	CO ϕ 9,2 x 20,25	**RONDELLE** SCHEIBE WASHER ARANDELA RONDELLA

137

8-971-50-B

R-08

ARMATURE DE CAPOTE
VERDECKARMATUR
CANVAS SUPPORT FRAME
ARMADURA DE CAPOTA
ARMATURA PER CAPOTE

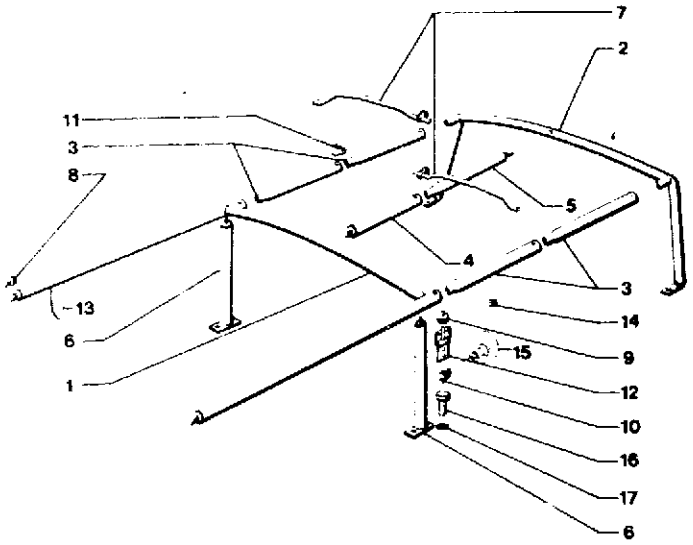

125 177 8-971-50B

I	NUMEROS		K	4/71 ▶	DESIGNATIONS
1	8CA	5 400 831	1	AV	**ARMATURE** ARMATUR FRAME ARMADURA ARMAUTRA
2	8CA	95 540 242	1	12/80 ▶	–
3	8CA	5 400 854	4	LAT	**TUBE** ROHR PIPE TUBO TUBO
4	8CA	5 400 851	1	CENT - AV	–
5	8CA	5 400 852	1	CENT - AR	–
6	8CA	5 400 866	2		**PIED MILIEU** MITTELPFOSTEN CENTRE PILLAR PIE MEDIO MONTANTE CENTRALE
7	8CA	5 400 863	2		**ARCEAU CENTRAL** MITTELSPRIEGEL CENTRE ARCH ARCO CENTRAL CENTINA CENTRALE
8	8CA	5 400 827	2		**EMBOUT** ENDSTUECK END-PIECE TERMINAL TERMINALE
9		AY 971 297 A	2		–
10	8CA	ZC 9 613 174 U	8		**TOURNIQUET** DREHKNOPF TURN-BOTTON BOTON-TORNIQUETE BOTTONE GIRANTE
11	8CA	5 400 860	?		**BUTÉE A RESSORT** ANSCHLAG MIT FEDER STOP WITH SPRING TOPE CON MUELLE REGGISPINTA A MOLLA
12	8CA	5 404 515	?	▶ 6/81	**SANGLE** SPANNBAND STRAP CINTURON CINGHIA
	8CA	5 404 515 * 700	?	6/81 ▶	–
13	8CA	5 413 669	2	AV	–
14	8AY	26 131 719	4		**BOUTON PRESSION** DRUCKKNOPF PRESS-BUTTON BOTON-PRESION BOTTONE-PRESSIONE
15	8AA	79 03 072 150	?	«POP» ψ 4	**RIVET** NIET RIVET REMACHE RIVETTO
16	9TT	23 857 019	8	TH 9 x 38	**VIS** SCHRAUBE SCREW TORNILLO VITE
17	9TT	79 03 058 087	8		**RONDELLE** SCHEIBE WASHER ARANDELA RONDELLA

137

8-971-51

R-07

ARMATURE DE CAPOTE
VERDECKARMATUR
CANVAS SUPPORT FRAME
ARMADURA DE CAPOTA
ARMATURA PER CAPOTE

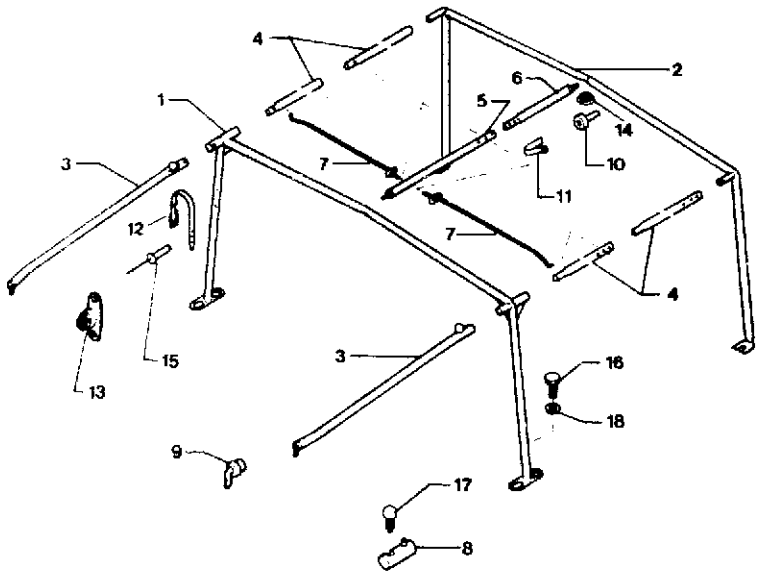

135 8-971-51

I	NUMEROS		K	4 x 4	DESIGNATIONS
1	8CA	95 540 254	1	AV	**ARMATURE** ARMATUR FRAME ARMADURA ARMATURA
2	8CA	95 540 242	1	AR	–
3	8CA	95 540 245	1	LAT G	–
	8CA	95 540 244	1	LAT D	–
4	8CA	5 400 854	4	LAT	**TUBE** ROHR PIPE TUBO TUBO
5	8CA	5 400 851	1	CENT AV	–
6	8CA	5 400 852	1	CENT AR	–
7	8CA	5 400 863	2		**ARCEAU CENTRAL** MITTELSPRIEGEL CENTRE ARCH ARCO CENTRAL CENTINA CENTRALE
8	8CA	95 540 248	2		**VERROU** RIEGEL LOCK CERRADERO CHIAVISTELLE
9	8CA	5 400 827	2		**EMBOUT** ENDSTUECK END-PIECE TERMINAL TERMINALE
10		AY 971 297 A	2		–
11	8CA	5 400 860	4		**BUTÉE A RESSORT** ANSCHLAG MIT FEDER SPRING STOP TOPE CON MUELLE REGGISPINTA A MOLLA
12	8CA	5 404 515	2	▶ 6/81	**SANGLE** ZUGBAND STRAP CORREA CINGHIA
	8CA	5 404 515 * 700	2	6/81 ▶	–
	8CA	5 413 669	4		–
13	8CA	ZC 9 613 174 U	8	▶ 6/81	**TOURNIQUET** DREHKNOPF TURN-BOTTON BOTON-TORNIQUETE BOTTONE GIRANTE
	8CA	95 574 281	14	E 5,5 6/81 ▶	–
	8CA	95 574 282	2	E 7,5 6/81 ▶	–
	8CA	95 574 283	4	E 9 6/81 ▶	–
14	8AY	26 131 719	?		**BOUTON PRESSION** DRUCKKNOPF PRESS-BUTTON BOTON PRESION BOTTONE PRESSIONE
15	8AY	79 03 072 150	?	«POP»ϕ 4	**RIVET** NIET RIVET REMACHE RIVETTO
16	9TT	23 857 019	4	TH 9 x 38	**VIS** SCHRAUBE SCREW TORNILLO VITE
17	8CA	95 540 251	1	ϕ 5 x 9,80	–
18	9TT	7903 058 087	4	9,2 x 20 x 2,5	**RONDELLE** SCHEIBE WASHER ARANDELA RONDELLA

137

8-971-51

R-06 ↓

ARMATURE DE CAPOTE (Suite)
VERDECKARMATUR (Forts.)
CANVAS SUPPORT FRAME (Cont.)
ARMADURA PER CAPOTA (Cont.)
ARMATURA DE CAPOTE (Cont.)

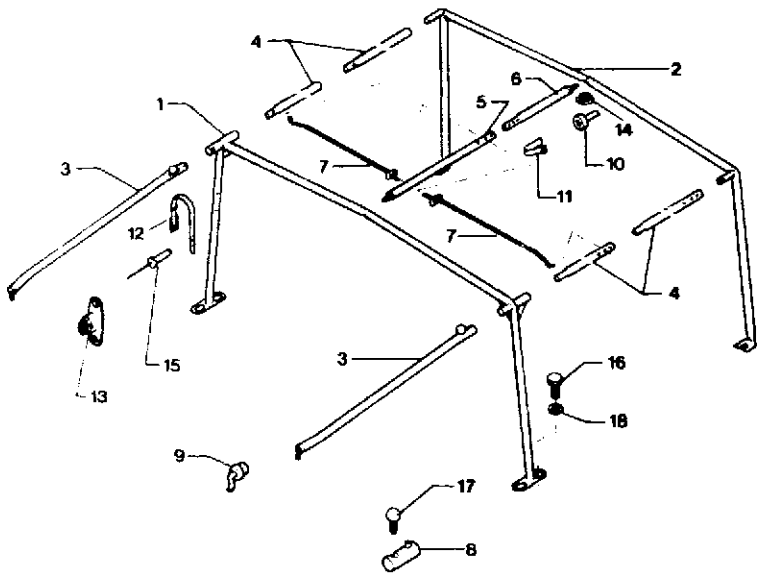

135

8-971-51

I	NUMEROS		K	4 x 4	DESIGNATIONS
	8CA	95 575 046 NFP	8		**CONTRE-PLAQUE DE TOURNIQUET** GEGENBLECH F. DREHKNOPF COUNTERPLATE F. TURN-BUTTON CONTRAPLACA DE TORNIQUETE CONTROPLACCA BOTT. GIRANTE

137

8-971-52

R-05 ↓

ARMATURE DE CAPOTE
VERDECKARMATUR
CANVAS SUPPORT FRAME
ARMADURA DE CAPOTA
ARMATURA PER CAPOTE

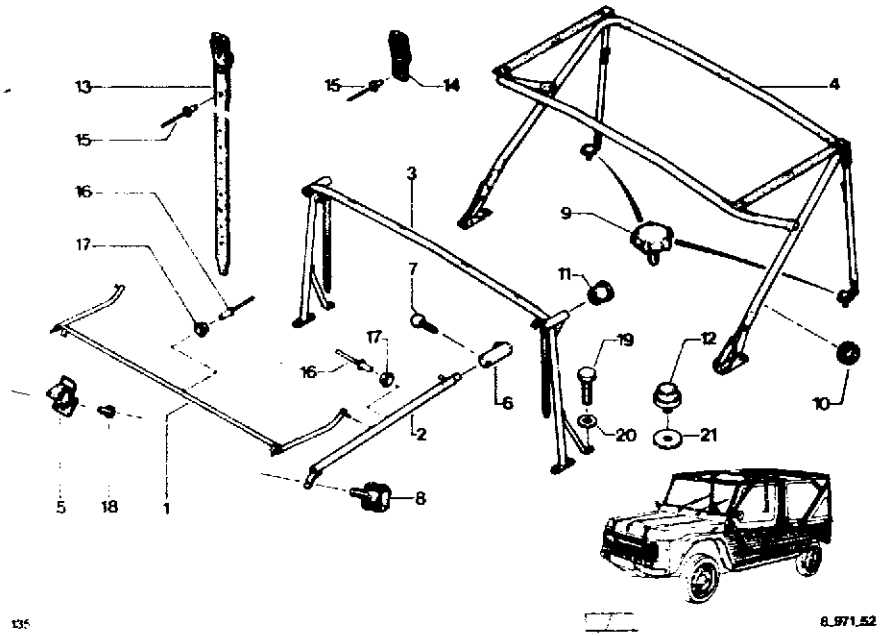

I	NUMEROS		K	«AZUR»	DESIGNATIONS
1	8CA	95 591 576	1	AV	**ARMATURE** ARMATUR FRAME ARMADURA ARMATURA
2	8CA	95 591 579	1	LAT - AV G	–
	8CA	95 591 578	1	LAT - AV D	–
3	8CA	95 591 577	1	CENT	–
4	8CA	95 591 580	1	AR COMPLET	–
	8CA	95 616 713	1	AR - G	–
	8CA	95 616 714	1	AR - D	–
5	8CA	95 591 575	2		**VERROU** RIEGEL LOCK CERRADERO CHIAVISTELLE
6	8CA	95 540 248	2		–
7	8CA	95 540 251	2	ϕ 5 x 0,80	**VIS DE PRESSION** DRUCKSCHRAUBE PRESSION SCREW TORNILLO DE PRESION VITE PRESSIONE
8	8CA	95 589 747	2		**MOLETTE** RAENDELSCHEIBE KNURLED BUTTON BOTON MOLETEADO BOTTONE ZIGRINATO
9	8CA	95 591 822	2		–
10	8CA	7[illegible] 03 073 118	2	CC	**OEILLET** OESE EYELET OJETE OCCHIELLO
11	8CA	AY 971 297 A	2	«PLASTIQUE»	**EMBOUT** ENDSTUECK END-PIECE TERMINAL TERMINALE
12	3AA	AZ 437 1 B	2		**BUTÉE**ANSCHLAG ANSCHLAG STOP TOPE REGGISPINTA
13	8CA	95 593 512	?	LON 510	**SANGLE** SPANNBAND STRAP CINTURON CINGHIA
14	8CA	5 404 515 * 811	2		–
15	8AA	26 187 469 **NFP**	?	«POP» ϕ 4	**RIVET** NIET RIVET REMACHE RIVETTO
16	8CA	79 03 072 151	3	«POP» - φ 3,2	–
17	8AA	26 131 719	3		**BOUTON** KNOPF KNOB BOTON BOTTONE
18	6CA	26 136 939	4	4 x 0,70 x 12	**VIS** SCHRAUBE SCREW TORNILLO VITE
19	9GX	23 857 019	10	TH 9 x 38	–
20	3RB	79 03 053 394	10	10,25 x 20 x 2	**RONDELLE** SCHEIBE WASHER ARANDELA RONDELLA
21	9TT	22 763 009 **NFP**	6	7,5 x 30 x 2	–

137

8-981-10

R-04

TAPIS
BODENMATTEN
CARPETS
ALBOMBRAS
TAPPETI

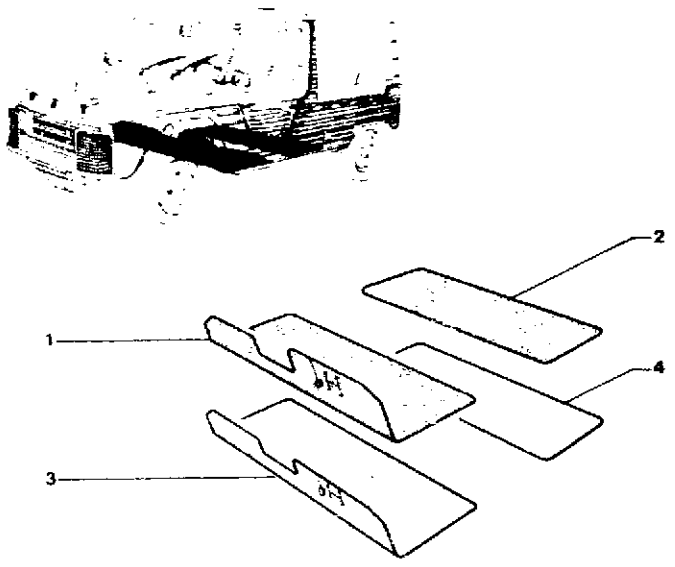

1	NUMEROS		K		DESIGNATIONS
1	8CA	75 529 095	1	CC - AV - TT 7/78 ▶ RMP *5 488 582*	**TAPIS** BODENMATTEN CARPETS ALBOMBRAS TAPPETI
2	8CA	5 488 583	1 1	AR - TT 7/77 ▶ 4/81 AR - 4 x 2 4/81 ▶ RMP ▶ 7/77	– –
	8CA	95 567 138	1	AR - 4 x 4 4/81 ▶	–
3	8CA	95 552 825	1	AV - 4 x 4	**INSONO SOUS TAPIS** GARNITUR UNTER MATTE LINING UNDER CARPET INSONORIZACION BAJO ALF. INSONORIZZ. SOTTO TAPPETO
4	8CA	95 552 826	1	AR - 4 x 4	–

ICI FIN DU GROUPE
HIER IST DAS ENDE DER GRUPPE
HERE IS THE END OF GROUP
AQUI ES EL FIN DEL GRUPO
QUI E LA FINE DEL GRUPPO

8

ET DU MICROCACIT
UND DER MIKROKARTEIKARTE
AND OF MICROFORM
Y DEL MICROCATOGO
E DEL MICROCATOGO

MIC 00137